YAMAHA

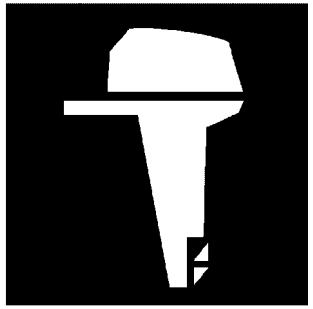

PARTS CATALOGUE
CATALOGO DE REPUESTOS

F75F'25 (6JX6)
F100G'25 (6JY6)

YAMAHA
GENUINE
Parts & Accessories

1Z6JX-200SA

( )

F75F/F100G
PARTS CATALOGUE
©2025 by Yamaha Motor Co., Ltd.
1st edition, August 2025
All rights reserved.
Any reprinting or unauthorized use
without the written permission of
Yamaha Motor Co., Ltd.
is expressly prohibited.
Printed in Japan.

F75F/F100G
CATALOGO DE REPUESTOS
©2025 por Yamaha Motor Co., Ltd.
1ª edición, agosto 2025
Todos los derechos reservados.
Toda reproducción o uso no autorizado
sin el consentimiento escrito de
Yamaha Motor Co., Ltd.
quedan expresamente prohibidos
Impreso en Japón.

FOREWORD

This Parts Catalogue is related to the parts for the model(s) on the cover page. When you are ordering replacement parts, please refer to this Parts Catalogue and quote both part numbers and part names correctly.

1. Modifications or additions which have been made after the issue of the Parts Catalogue will be announced in the Parts News.
   It is advisable that you make the necessary corrections to the Parts Catalogue according to the Parts News.

2. Abbreviations
   The following abbreviations are used in this Parts Catalogue.
   "UR" Use specified parts number.
   "UN" Use as many as needed.
   "AP" Alternate Parts
   "LM" Locally Made (Parts need to be ordered locally)
   "F#" Frame No. (Applicable machine No.)
   "O/S" Over Size

3. The number of components for assembly
   - Parts, which are to be supplied in an assembly, are listed with a dot (.) in front of the part name as shown below.
   - The numeral appearing to the right of each component part indicates the quantity of parts for each assembly unit.

PART NO.	DESCRIPTION	Q'TY	REMARKS
2F5–83310–60	FRONT FLASHER LIGHT ASSY	2	
115–83311–60	.BULB (6V–18W)	1	

4. Applicable colours of graphics are represented in the "REMARKS" as shown below.

PART NO.	DESCRIPTION	Q'TY	REMARKS
2N4–24110–00–X5	FUEL TANK COMP.	2	MXR
3J1–24240–10	.GRAPHIC, FUEL TANK	1	FOR MXR

5. Note that the illustrations for reference in finding parts numbers are not to be used for assembling. When assembling, please use the applicable service manual.

6. The asterisk (*) before a reference number indicates modified items after the first edition.

7. Applicable Serial No.
   Engine Serial No.

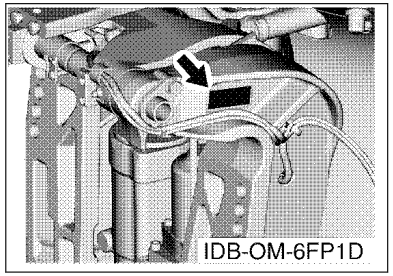
IDB-OM-6FP1D

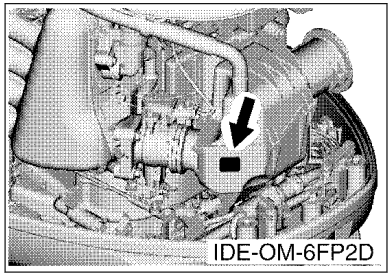
IDE-OM-6FP2D

8. Applicable Engine Starting Serial No.

Model	Serial No.	Model	Serial No.
F75F	6JX-1001201	F100G	6JY-1004264

9. Applicable Colour Code

Abbreviation	Colour Name	Colour Code
DBN1	DARK BLUISH GRAY 1	008D

10. Quantity Column Information

Column No.	Name Of Q'ty Column	Applicable Model
1	ET	F75FET/F100GET
2	EHT	F75FEHT/F100GEHT

PROLOGO

Este catálogo de repuestos corresponde a las piezas para el o los modelos que figuran en la página de portada. Al formular el pedido de repuestos, se ruega citar este catálogo y especificar correctamente el número y el nombre de las piezas.

1. Las modificaciones y agregados que se hayan realizado después de la edición de este Catálogo de Repuestos, serán anunciados en las Informaciones de Recambios.
   Es recomendable que se hagan las correcciones necesarias en el Catálogo de Repuestos de acuerdo con las Informaciones de Recambios.

2. Abreviaciones
   En este. Catálogo de Repuestos se emplean las siguientes abreviaciones.
   "UR" Usar el número de partes especificado
   "UN" Usar la cantidad necesaria
   "AP" Piezas sustitutivas
   "LM" Fabricación local (Hay que pedir los repuestos en las cercanías)
   "F#" Nº de bastidor (Nº aplicable a la máquina)
   "O/S" Sobredimensionado

3. La cantidad de componentes para el montaje
   - Los componentes, suministrados como conjunto, se describen con un punto (.) que precede al nombre del parte como se indica a continuación.
   - La numeración que aparece a la derecha de cada descripción indica la cantidad de partes por cada unidad de conjunto.

CODIGO Nº	DESCRIPCION	CANT.	OBSERVACIONES
2F5–83310–60	ENSAMBLAJE DE LA LUZ	2	
115–83311–60	.BOMBILLA (6V–18W)	1	

4. Los colores de los componentes se indican como sigue en la columna de "OBSERVACIONES".

CODIGO Nº	DESCRIPCION	CANT.	OBSERVACIONES
2N4–24110–00–X5	COMP. DEL TANQUE	2	MXR
3J1–24240–10	.GRAFICO, DEL TANQUE	1	PARA MXR

5. Debe tenerse en cuenta que las ilustraciones sirven como guia para la búsqueda de los números de partes y no deben usarse para el montaje. Durante el montaje, se recomienda usar el manual de taller correspondiente.

6. EL asterisco (*) antes del número de referencia indica los elementos modificados después de la primera edición.

7. Números de serie
   Nº de Serie del motor

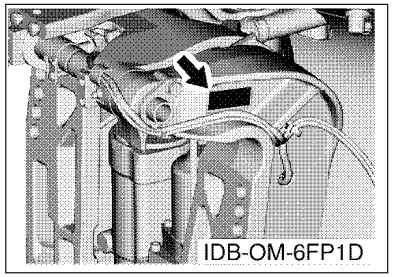

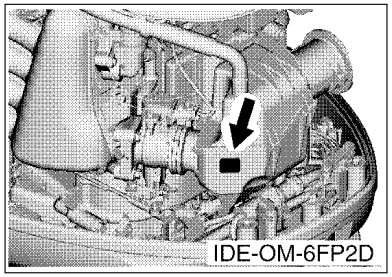

8. Números de serie del motor

Modelo	Nº de serie	Modelo	Nº de serie
F75F	6JX-1001201	F100G	6JY-1004264

9. Códigos de color aplicables

Abreviatura	Nombre de color	Código de color
DBN1	DARK BLUISH GRAY 1	008D

10. Informacion para la columna de cantidades

Columna Nº	Nombre de la columna de cantidades	Modelo aplicable
1	ET	F75FET/F100GET
2	EHT	F75FEHT/F100GEHT

CONTENTS

SCHEDULED SERVICE PARTS....1
TOP COWLING....2
CYLINDER & CRANKCASE 1....3
CRANKSHAFT & PISTON....5
CYLINDER & CRANKCASE 2....7
VALVE....9
INTAKE 1....11
INTAKE 2....13
INTAKE 3....14
VAPOR SEPARATOR 1....15
VAPOR SEPARATOR 2....16
FUEL....17
GENERATOR....19
ELECTRICAL 1....20
ELECTRICAL 2....21
ELECTRICAL 3....22
ELECTRICAL 4....23
ELECTRICAL 5....24
ELECTRICAL 6....25
STARTING MOTOR....26
BOTTOM COWLING 1....27
BOTTOM COWLING 2....29
STEERING 1....30
STEERING 2....33
STEERING 3....34
STEERING FRICTION....35
CONTROL....36
BRACKET 1....38
BRACKET 2....40
POWER TRIM & TILT ASSY 1....42
POWER TRIM & TILT ASSY 2....45
UPPER CASING....46
OIL PAN....48
LOWER CASING & DRIVE 1....49
LOWER CASING & DRIVE 2....53
FUEL TANK 1....56
FUEL TANK 2....57
FUEL TANK 3....58
STEERING GUIDE....59
REMOTE CONTROL BOX....60
REMOTE CONTROL ASSY....61
METER....64
OPTIONAL PARTS 1....65
OPTIONAL PARTS 2....68
OPTIONAL PARTS 3....69
OPTIONAL PARTS 4....70
OPTIONAL PARTS 5....71
REPAIR KIT 1....72
REPAIR KIT 2....73

INDEX

NUMERICAL INDEX....75

CONTENIDO

PARTES DE REPUESTO TEMPORALES..... 1
SOPORTE SUPERIOR..... 2
CILINDRO & CARTER 1..... 3
CIGUENAL & PISTON.....5
CILINDRO & CARTER 2..... 7
VALVULA.....9
ADMISION 1..... 11
ADMISION 2..... 13
ADMISION 3..... 14
SEPARADOR DE VAPOR 1.....15
SEPARADOR DE VAPOR 2.....16
COMBUSTIBLE..... 17
GENERADOR.....19
EQUIPO ELECTRICO 1..... 20
EQUIPO ELECTRICO 2..... 21
EQUIPO ELECTRICO 3..... 22
EQUIPO ELECTRICO 4..... 23
EQUIPO ELECTRICO 5..... 24
EQUIPO ELECTRICO 6..... 25
MOTOR DE ARRANQUE.....26
CUBIERTA INFERIOR 1..... 27
CUBIERTA INFERIOR 2..... 29
DIRECCION 1.....30
DIRECCION 2.....33
DIRECCION 3.....34
FRICCION DE DIRECCION..... 35
CONTROL..... 36
SOPORTE 1..... 38
SOPORTE 2..... 40
COMPONER Y PODER VARILLA 1.....42
COMPONER Y PODER VARILLA 2.....45
FUNDA SUPERIOR.....46
OIL PAN.....48
IMPULSOR E INFERIOR 1..... 49
IMPULSOR E INFERIOR 2..... 53
DEPOSITO DE COMBUSTIBLE 1..... 56
DEPOSITO DE COMBUSTIBLE 2..... 57
DEPOSITO DE COMBUSTIBLE 3..... 58
DIRECCIONGUIAR..... 59
CONTROL REMOTO COMPLETO..... 60
CONTROL REMOTO COMPL.....61
MEDIDOR.....64
PARTES OPCIONALES 1.....65
PARTES OPCIONALES 2.....68
PARTES OPCIONALES 3.....69
PARTES OPCIONALES 4.....70
PARTES OPCIONLES 5..... 71
ESTUCHE REPARATION 1..... 72
ESTUCHE REPARATION 2..... 73

INDICE

INDICE NUMERICO.....75

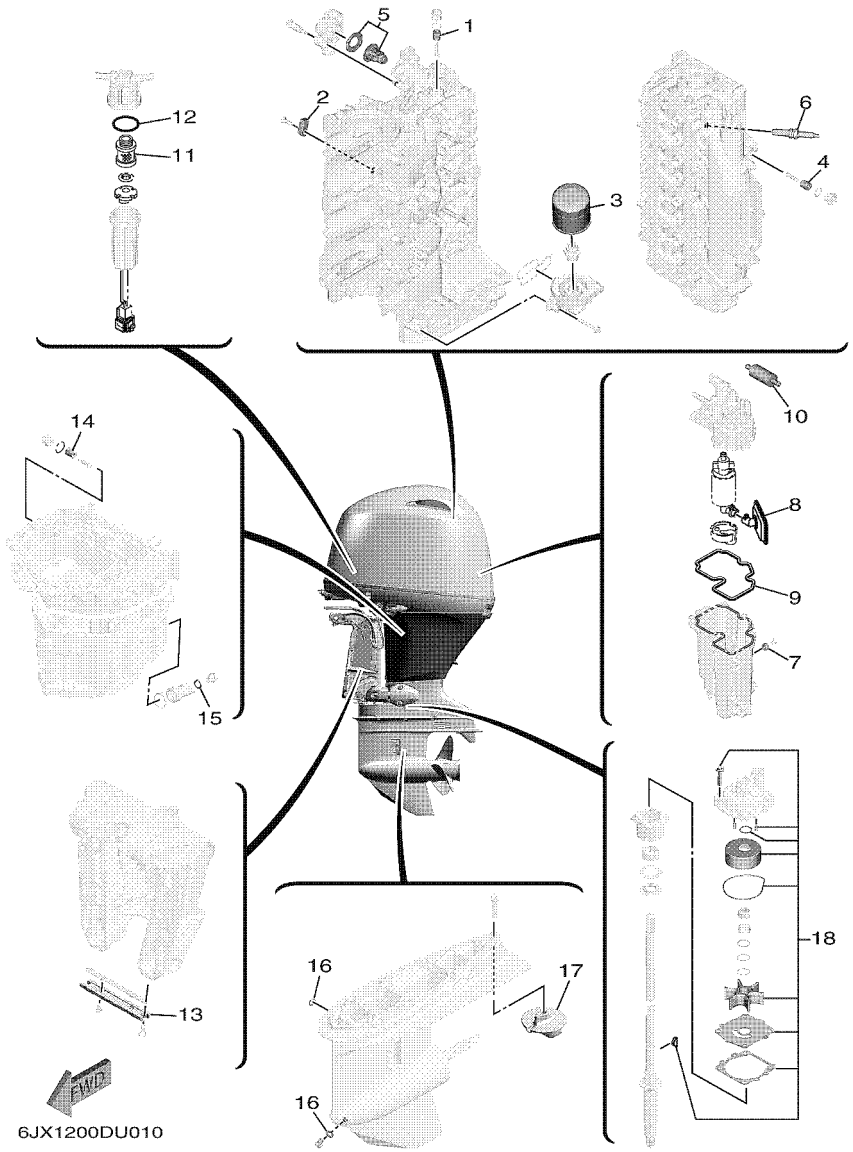

FIG. 1 SCHEDULED SERVICE PARTS — PARTES DE REPUESTO TEMPORALES

REF. NO.	PART NO. CODIGO Nº	DESCRIPTION DESCRIPCION	ET	EHT				REMARKS OBSERVACIONES
1	6G8–11325–00	ANODE ANODO	1	1				
2	63P–11325–01	ANODE ANODO	1	1				
3	5GH–13440–72	ELEMENT ASSY, OIL CLEANER ELEMENTO FILTRO DE ACEITE	1	1				
4	6G8–11325–00	ANODE ANODO	2	2				
5	6FP–12411–00	THERMOSTAT TERMOSTAT	1	1				
6	94702–00440	PLUG, SPARK (NGK LKR6E 9N) BUJIA (NGK LKR6E 9N)	4	4				
7	63P–11325–21	ANODE ANODO	1	1				
8	6FP–13915–00	FILTER FILTRO	1	1				
9	6FP–14984–00	GASKET, FLOAT CHAMBER EMPAQUE CAMARA DE BOIA	1	1				
10	6C5–24251–01	STRAINER 1 COLADOR 1	1	1				
11	6D8–24563–00	ELEMENT, FILTER ELEMENTO DEL FILTRO	1	1				
12	6D8–24564–00	GASKET EMPAQUE	1	1				
13	6H1–45251–03	ANODE CATODE	1	1				
14	6G8–11325–00	ANODE ANODO	1	1				
15	90430–14M09	GASKET JUNTA	1	1				
16	90430–08003	GASKET JUNTA	2	2				
17	6E5–45371–01	TAB-TRIM QUILLA ESTABILIZADOR	1	1				
18	60C–W0078–01	WATER PUMP REPAIR KIT ESTUCHE REPARACION BOMBA AGUA	1	1				

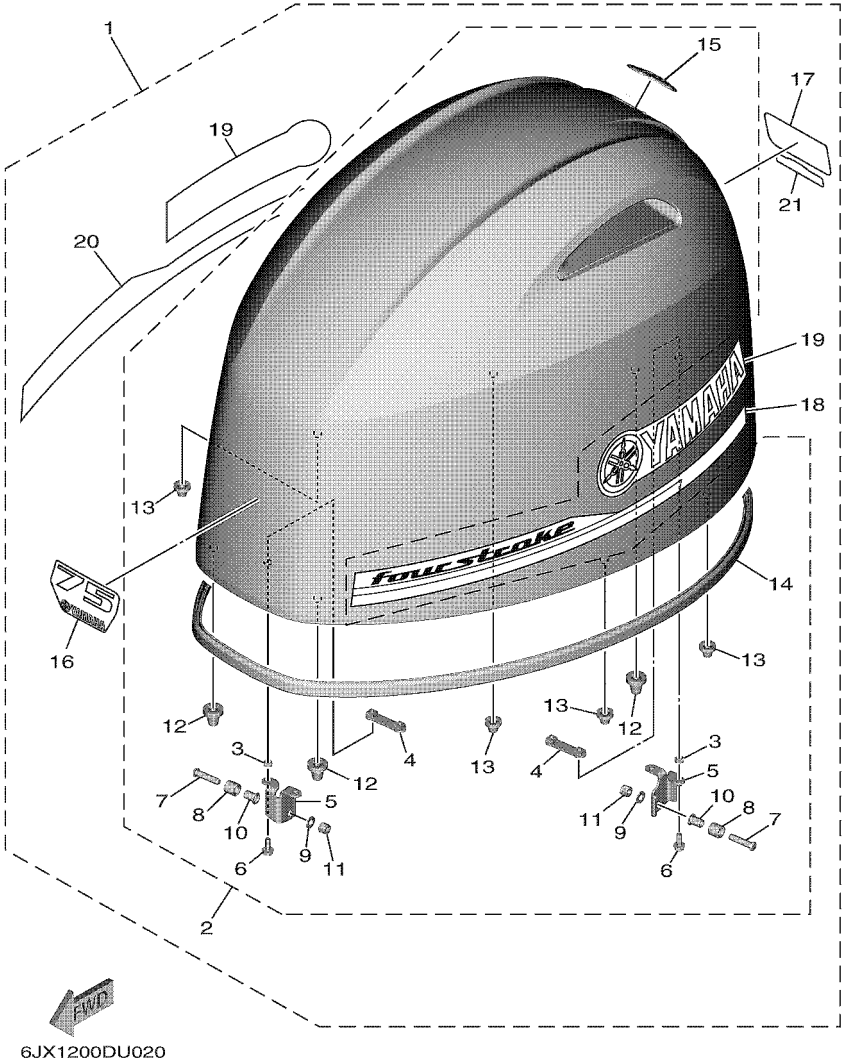

6JX1200DU020

FIG. 2 TOP COWLING — SOPORTE SUPERIOR

REF. NO.	PART NO. CODIGO Nº	DESCRIPTION DESCRIPCION	ET	EHT				REMARKS OBSERVACIONES
1	6JX–42610–02	TOP COWLING ASSY SOPORTE SUPERIOR COMPL.	1	1				F75F F75F
	6JY–42610–02	TOP COWLING ASSY SOPORTE SUPERIOR COMPL.	1	1				F100G F100G
2	6FP–4261A–03	.TOP COWLING W/O GRAPHICS .SOPORTE SUPERIOR SIN GRAFICOS	1	1				
3	90387–07046	..COLLAR ..ESPACIADOR	4	4				
4	6EK–42646–00	..PLATE, CLAMP ..PLACA GRAMPA	2	2				
5	6FP–42647–00	..HOLDER, CLAMP BAND ..MORDAZA DE ABRAZADERA	2	2				
6	90105–06039	..BOLT, FLANGE ..TORNILLO	4	4				
7	90111–08078	..BOLT, HEXAGON SOCKET BUTTON ..TORNILLO	2	2				
8	90387–10094	..COLLAR ..ESPACIADOR	2	2				
9	92990–08600	..WASHER, PLATE ..ARANDELA PLANA	2	2				
10	90387–08M45	..COLLAR ..ESPACIADOR	2	2				
11	95780–08300	..NUT, FLANGE ..TUERCA	2	2				
12	68F–42663–01	..DAMPER 2 ..AMORTIGUADOR 2	3	3				
13	663–42662–01	..DAMPER ..AMORTIGUADOR	4	4				
14	6FP–42615–02	..SEAL ..SELLO	1	1				
15	6DA–42697–00	..TUNING FORK MARK ..MARCA, YAMAHA	1	1				
16	6BC–42677–01	.GRAPHIC, FRONT .CALCAMONIA FRONTAL	1	1				F75F F75F
	60C–42677–21	.GRAPHIC, FRONT .CALCAMONIA FRONTAL	1	1				F100G F100G
17	6BC–42678–21	.GRAPHIC, REAR .CALCAMONIA TRASERA	1	1				F75F F75F
	60C–42678–31	.GRAPHIC, REAR .CALCAMONIA TRASERA	1	1				F100G F100G
18	6JX–42675–01	.GRAPHIC, SIDE 1 .CALCAMONIA LATERAL 1	1	1				
19	60C–42681–11	.MARK, COWLING .MARCA DE CUBIERTA	2	2				
20	6JX–42676–01	.GRAPHIC, SIDE 2 .CALCAMONIA LATERAL 2	1	1				
21	6S1–4267A–01	.GRAPHIC, REAR 2 .CALCAMONIA TRASERA 2	1	1				

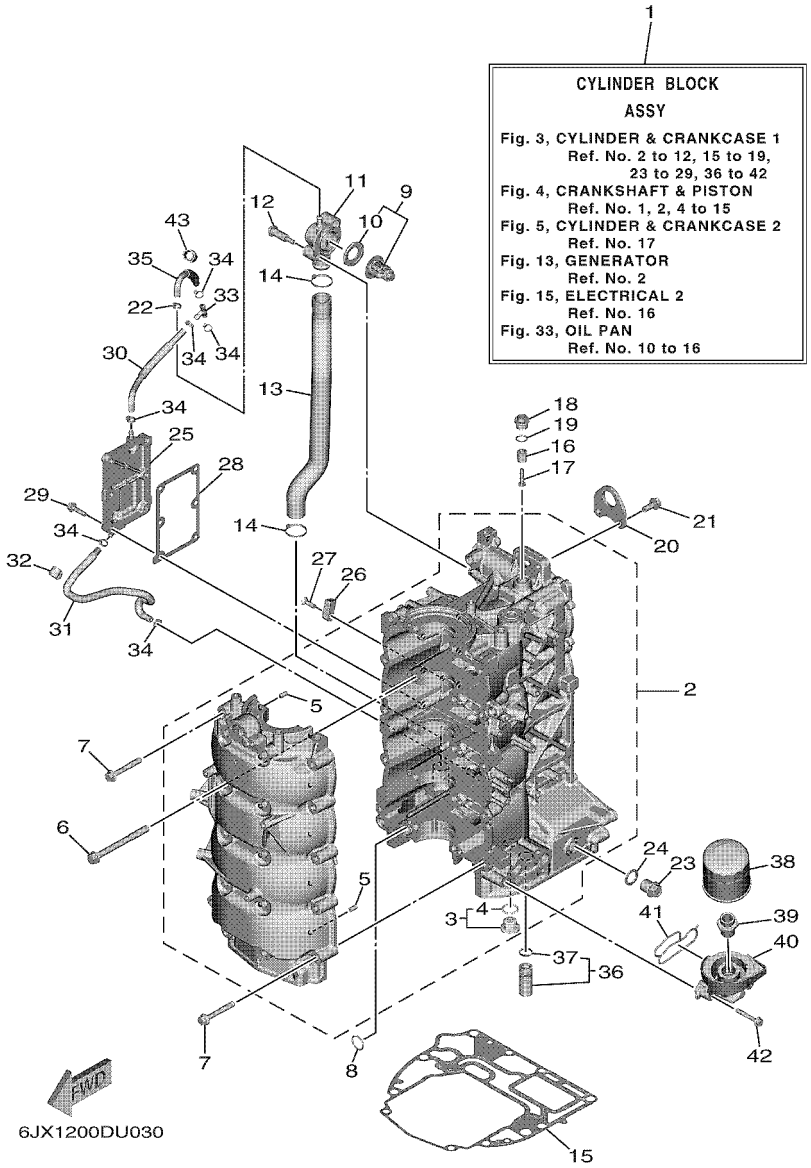

FIG. 3 CYLINDER & CRANKCASE 1 — CILINDRO & CARTER 1

REF. NO.	PART NO. CODIGO Nº	DESCRIPTION DESCRIPCION	ET	EHT				REMARKS OBSERVACIONES
1	6FP–W009B–12–9S	CYLINDER BLOCK ASSY CILINDRO BLOQUE COMPLETO	1	1				
2	6FP–15109–10–9S	CRANKCASE ASSY CARTER COMPLETO	1	1				
3	6EK–11313–00	.PLUG, BLIND .TAPON CIEGO	1	1				
4	93210–207A0	..O-RING ..ANILLO O	1	1				
5	93606–12019	.PIN, DOWEL .PASADOR DE CLAVIJA	10	10				
6	90119–10057	BOLT, WITH WASHER TORNILLO CON ARANDELA	10	10				
7	90105–08170	BOLT, FLANGE TORNILLO	10	10				
8	93210–19MJ1	O-RING ANILLO O	1	1				
9	6FP–12411–00	THERMOSTAT TERMOSTAT	1	1				
10	6EK–12412–00	.SEAL, THERMOSTAT .SELLO TERMOSTATO	1	1				
11	6EK–12413–00	COVER, THERMOSTAT CUBIERTA TERMOSTATO	1	1				
12	90109–06286	BOLT PERNO	2	2				
13	6EK–1243A–00	HOSE 1 TUBO 1	1	1				
14	90465–11M59	CLAMP BRIDA	2	2				
15	6EK–11351–01	GASKET, CYLINDER JUNTA, DE CILINDRO	1	1				
16	6G8–11325–00	ANODE ANODO	1	1				
17	98980–05025	SCREW, BIND TORNILLO DE LIGAR	1	1				
18	6G8–11197–A0	PLUG, BLIND TAPON, CIEGO	1	1				
19	93210–13M63	O-RING ANILLO O	1	1				
20	6FP–11119–00	HANGER, ENGINE SOPORTE DEL MOTOR	1	1				
21	95D95–08020	BOLT, FLANGE DEEP RECESS CERROJO, REBORDE HUECO PROFUND	2	2				
22	90465–11M10	CLAMP BRIDA	1	1				
23	90340–18M09	PLUG, STRAIGHT SCREW TORNILLO, DE DRENAJE	1	1				
24	90201–186F1	WASHER, PLATE ARANDELA PLANA	1	1				
25	6FP–15414–00–9S	COVER 1 CUBIERTA 1	1	1				
26	63P–11325–01	ANODE ANODO	1	1				
27	90151–06M02	SCREW, COUNTERSUNK TORNILLO EMBUTIDO	1	1				

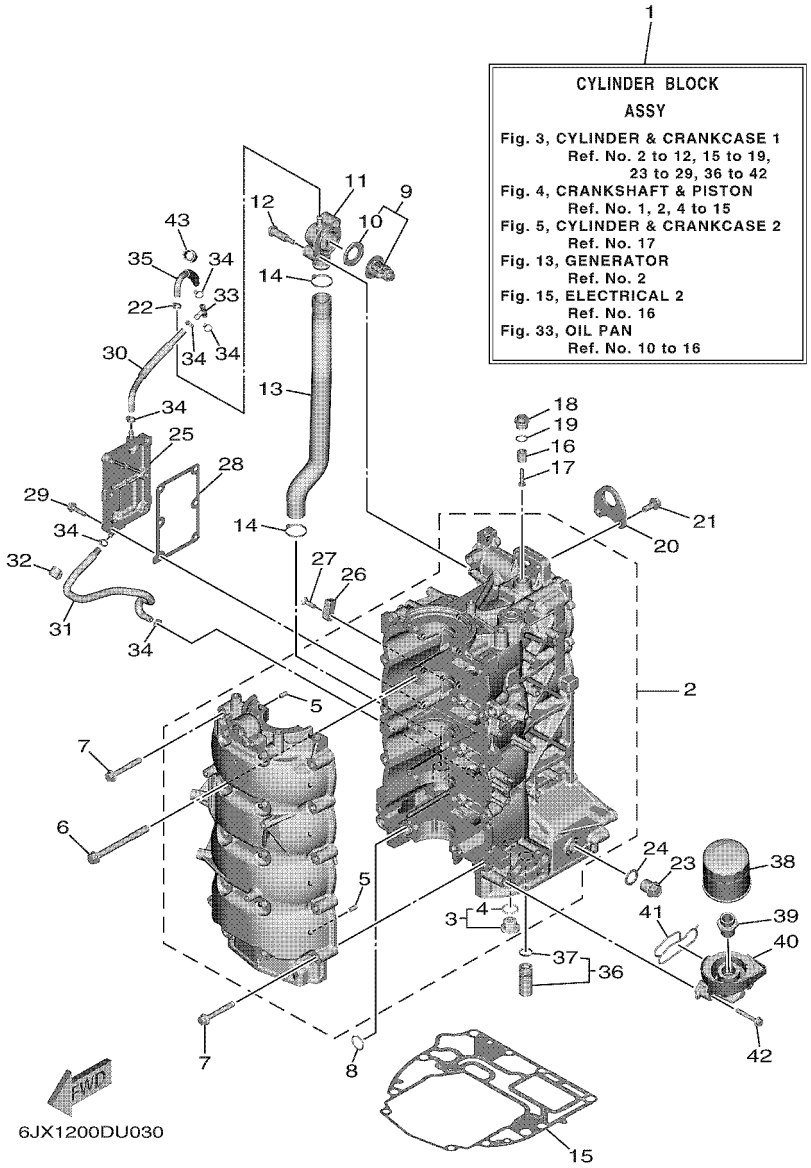

FIG. 3 CYLINDER & CRANKCASE 1 — CILINDRO & CARTER 1

REF. NO.	PART NO. CODIGO Nº	DESCRIPTION DESCRIPCION	ET	EHT				REMARKS OBSERVACIONES
28	6FP–15353–00	GASKET, DRAIN JUNTA DE DRENAJE	1	1				
29	90105–06037	BOLT, FLANGE TORNILLO	6	6				
30	6FP–12483–00	PIPE 3 TUBO 3	1	1				
31	6FP–12484–00	PIPE 4 TUBO 4	1	1				
32	90465–08M83	CLAMP BRIDA	1	1				
33	688–24378–00	PIPE, JOINT 3 TUBO DE UNION 3	1	1				
34	90465–11M10	CLAMP BRIDA	6	6				
35	6FP–12485–00	PIPE 5 TUBO 5	1	1				
36	6EK–13490–00	RELIEF VALVE ASSY VALVELA DE DESCOMPRESION	1	1				
37	6CB–13473–00	.O-RING .ANILLO O	1	1				
38	5GH–13440–72	ELEMENT ASSY, OIL CLEANER ELEMENTO FILTRO DE ACEITE	1	1				
39	90401–20007	BOLT, UNION PERNO DE UNION	1	1				
40	6FP–13446–00	CONNECTOR CONECTOR	1	1				
41	6FP–13475–00	GASKET EMPAQUE	1	1				
42	90105–06151	BOLT, FLANGE TORNILLO	3	3				
43	90464–13227	CLAMP BRIDA	1	1				

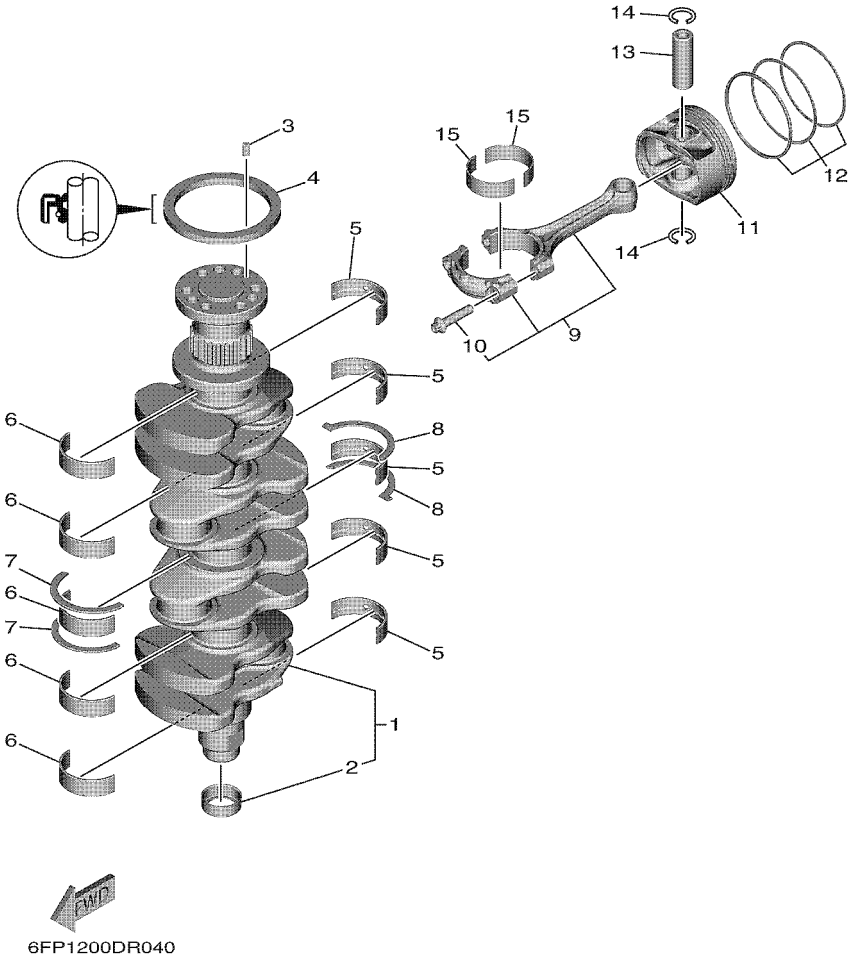

6FP1200DR040

FIG. 4 CRANKSHAFT & PISTON — CIGUENAL & PISTON

REF. NO.	PART NO. CODIGO Nº	DESCRIPTION DESCRIPCION	ET	EHT				REMARKS OBSERVACIONES
1	6EK–11410–01	CRANKSHAFT CIGUENAL	1	1				
2	6CB–11478–00	.COLLAR .COLLAR	1	1				
3	93606–12019	PIN, DOWEL PASADOR DE CLAVIJA	1	1				
4	93102–85008	OIL SEAL SELLO ACEITE	1	1				
5	6EK–11416–00	PLANE BEARING, CRANKSHAFT 1 COJINETE PLANO 1	5	5				UR YELLOW UR YELLOW
	6EK–11416–10	PLANE BEARING, CRANKSHAFT 1 COJINETE PLANO 1	5	5				UR GREEN UR GREEN
	6EK–11416–20	PLANE BEARING, CRANKSHAFT 1 COJINETE PLANO 1	5	5				UR BLUE UR BLUE
	6EK–11416–30	PLANE BEARING, CRANKSHAFT 1 COJINETE PLANO 1	5	5				UR RED UR RED
	6EK–11416–40	PLANE BEARING, CRANKSHAFT 1 COJINETE PLANO 1	5	5				UR BLACK UR BLACK
6	6EK–11417–00	PLANE BEARING, CRANKSHAFT 2 COJINETE PLANO 2	5	5				UR YELLOW UR YELLOW
	6EK–11417–10	PLANE BEARING, CRANKSHAFT 2 COJINETE PLANO 2	5	5				UR GREEN UR GREEN
	6EK–11417–20	PLANE BEARING, CRANKSHAFT 2 COJINETE PLANO 2	5	5				UR BLUE UR BLUE
	6EK–11417–30	PLANE BEARING, CRANKSHAFT 2 COJINETE PLANO 2	5	5				UR RED UR RED
	6EK–11417–40	PLANE BEARING, CRANKSHAFT 2 COJINETE PLANO 2	5	5				UR BLACK UR BLACK
7	6EK–11426–01	BEARING, THRUST 1 COJINETE DE EMPUJE 1	2	2				
8	6EK–11427–00	BEARING, THRUST 2 COJINETE DE EMPUJE 2	2	2				
9	6EK–W1165–00	CONNECTING ROD ASSY BIELA COMPLETA	4	4				
10	K1C–A3275–00	.BOLT, CONNECTING ROD .TORNILLO DE BIELA	2	2				
11	6FP–11631–01	PISTON (STD) PISTON (NORMA)	4	4				
	6FP–11635–01	PISTON (0.25MM O/S) PISTON (0.25MM O/S)	4	4				AP AP
12	6EK–11603–01	PISTON RING SET (STD) JUEGO DE ANILLOS (NORMA)	4	4				
	6EK–11604–01	PISTON RING SET (0.25MM O/S) JUEGO DE ANILLOS (0.25MM O/S)	4	4				AP AP
13	6EK–11633–00	PIN, PISTON PASADOR, PISTON	4	4				
14	93450–19052	CIRCLIP SEGURO	8	8				
15	6EK–11656–00	PLANE BEARING, CONNECTING ROD COJINETE PLANO	8	8				UR YELLOW UR YELLOW
	6EK–11656–10	PLANE BEARING, CONNECTING ROD COJINETE PLANO	8	8				UR GREEN UR GREEN
	6EK–11656–20	PLANE BEARING, CONNECTING ROD COJINETE PLANO	8	8				UR BLUE UR BLUE

FIG. 4 CRANKSHAFT & PISTON — CIGUENAL & PISTON

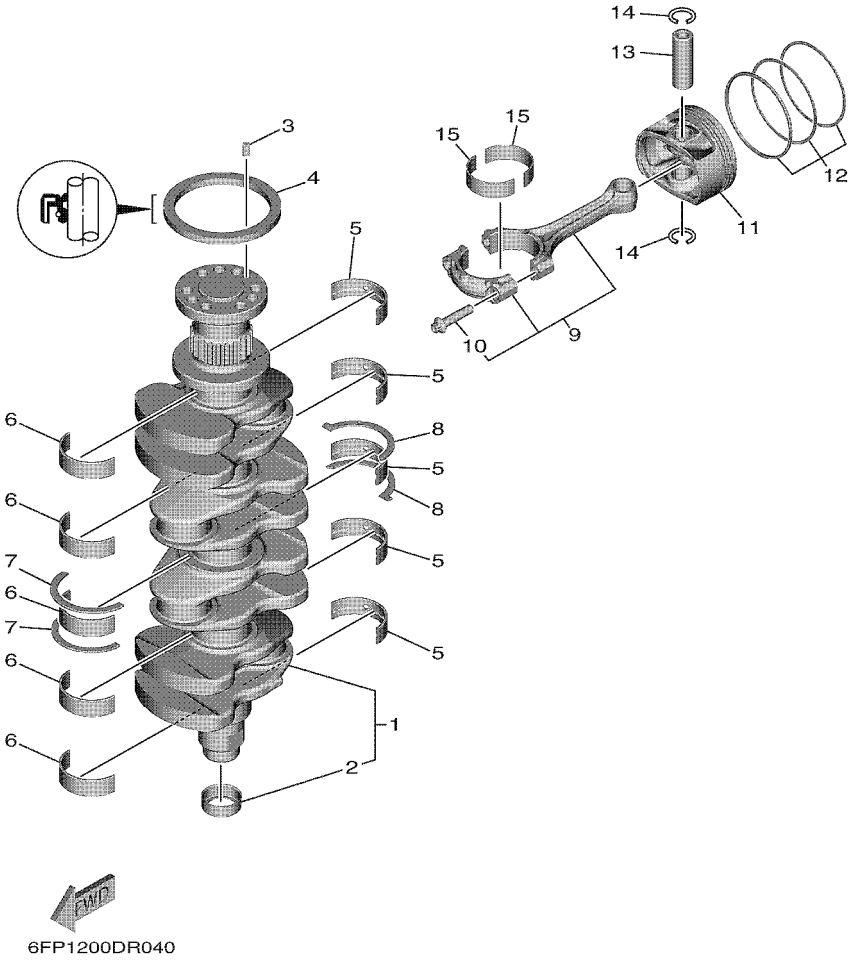

REF. NO.	PART NO. CODIGO Nº	DESCRIPTION DESCRIPCION	ET	EHT				REMARKS OBSERVACIONES
15	6EK–11656–30	PLANE BEARING, CONNECTING ROD COJINETE PLANO	8	8				UR RED UR RED
	6EK–11656–40	PLANE BEARING, CONNECTING ROD COJINETE PLANO	8	8				UR BLACK UR BLACK

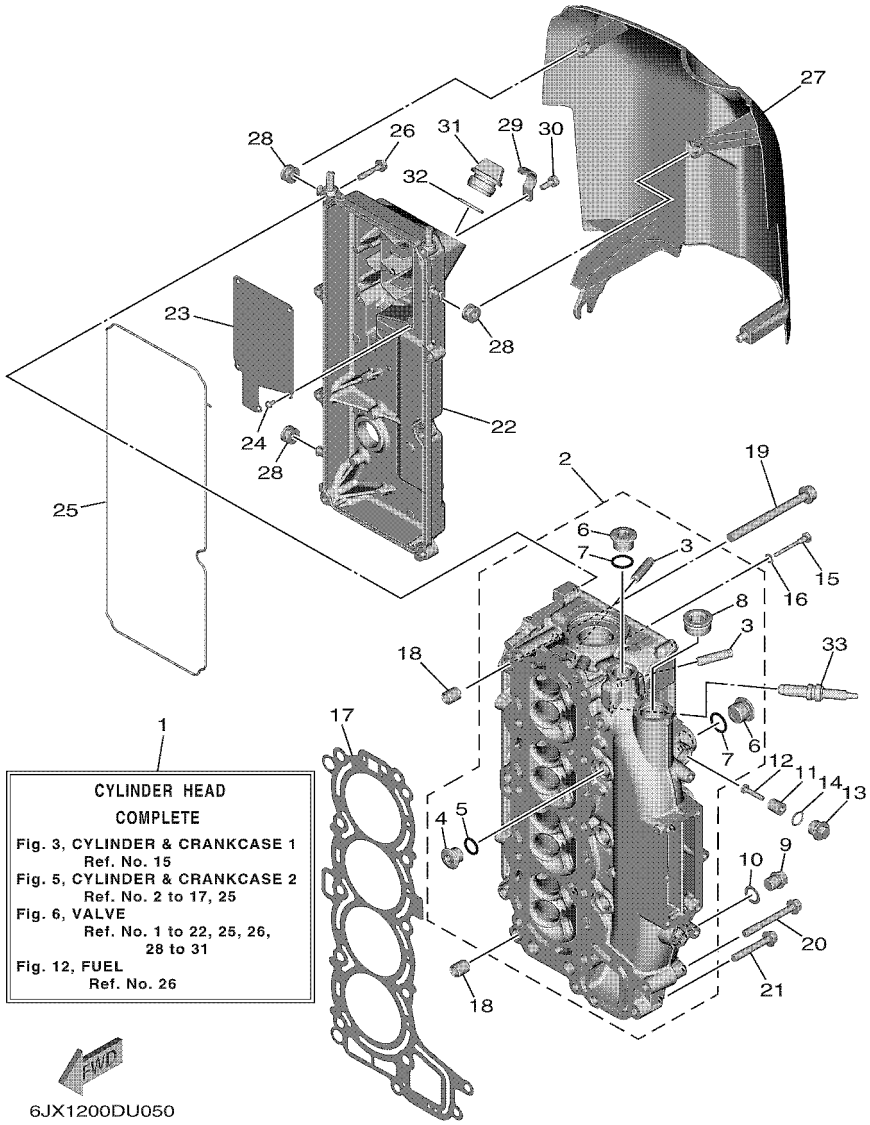

FIG. 5 CYLINDER & CRANKCASE 2 — CILINDRO & CARTER 2

REF. NO.	PART NO. CODIGO Nº	DESCRIPTION DESCRIPCION	ET	EHT				REMARKS OBSERVACIONES
1	6JX–W009A–10–9S	CYLINDER HEAD COMPLETE CILINDRD CULATA COMPLETO	1	1				
2	6FP–W1111–00–9S	HEAD, CYLINDER 1 CULATA CILINDRO 1	1	1				
3	6DA–11133–10	.GUIDE, VALVE 1 .GUIA DE VALVULA 1	16	16				
4	90340–99001	.PLUG, STRAIGHT SCREW .TORNILLO, DE DRENAJE	3	3				
5	93210–14579	.O-RING .ANILLO O	3	3				
6	90340–97002	.PLUG, STRAIGHT SCREW .TORNILLO, DE DRENAJE	4	4				
7	93210–18322	.O-RING .ANILLO O	4	4				
8	90340–27001	.PLUG, STRAIGHT SCREW .TORNILLO, DE DRENAJE	1	1				
9	90340–14M06	PLUG, STRAIGHT SCREW TORNILLO, DE DRENAJE	1	1				
10	90430–14115	GASKET JUNTA	1	1				
11	6G8–11325–00	ANODE ANODO	2	2				
12	98980–05025	SCREW, BIND TORNILLO DE LIGAR	2	2				
13	6G8–11197–A0	PLUG, BLIND TAPON, CIEGO	2	2				
14	93210–13M63	O-RING ANILLO O	2	2				
15	90109–06M65	BOLT PERNO	1	1				
16	90430–06014	GASKET JUNTA	1	1				
17	6FP–11181–00	GASKET, CYLINDER HEAD 1 JUNTA, DE CULATA 1	1	1				
18	99530–14016	PIN, DOWEL PASADOR, DE ESPIGA	2	2				
19	90149–10072	SCREW TORNILLO DE REGLAJE	10	10				
20	90105–08220	BOLT, FLANGE TORNILLO	1	1				
21	90105–08175	BOLT, FLANGE TORNILLO	2	2				
22	6FP–11191–00	COVER, CYLINDER HEAD 1 TAPA CULATA DE CILINDRO 1	1	1				
23	6FP–11168–00	COVER, BREATHER CUBIERTA RESPIRADERO	1	1				
24	97607–04208	SCREW, WITH WASHER TORNILLO CAB CON PLANA C/ARAN	5	5				
25	6FP–11193–00	GASKET, HEAD COVER 1 EMPAQUE	1	1				
26	95D95–06030	BOLT, FLANGE DEEP RECESS CERROJO, REBORDE HUECO PROFUND	8	8				
27	6FP–11192–00	COVER, CYLINDER HEAD 2 TAPA CULATA DE CILINDRO 2	1	1				

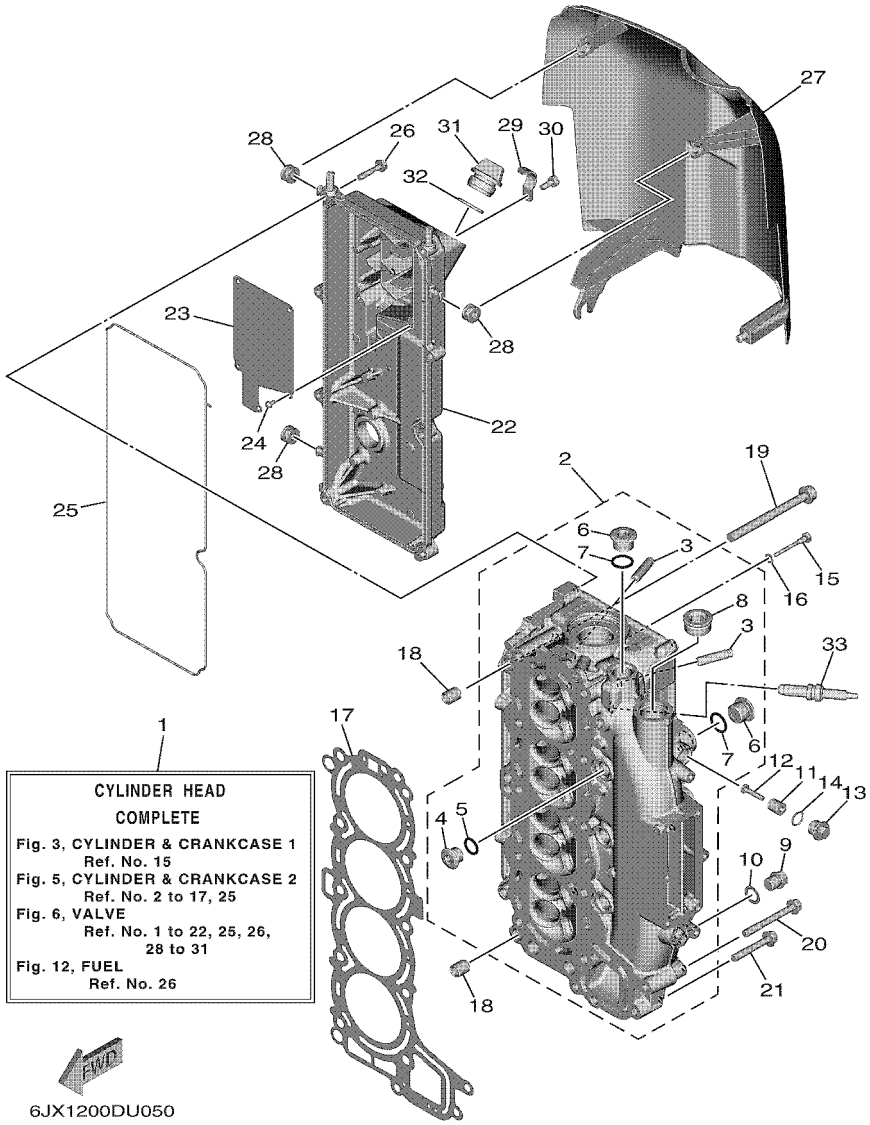

FIG. 5 CYLINDER & CRANKCASE 2 — CILINDRO & CARTER 2

REF. NO.	PART NO. CODIGO Nº	DESCRIPTION DESCRIPCION	ET	EHT				REMARKS OBSERVACIONES
28	90480–12314	GROMMET TAPON	3	3				
29	6CJ–13428–00	BRACKET, STRAINER 1 SOPORTE COLADOR 1	1	1				
30	97E95–06516	BOLT, HEXAGON W/W DEEP RECESS TORNILLO HEXAGONAL CON RONDONA	1	1				
31	6G8–15363–00	PLUG, OIL TAPON DE ACEITE	1	1				
32	93210–24M79	O-RING ANILLO O	1	1				
33	94702–00440	PLUG, SPARK (NGK LKR6E 9N) BUJIA (NGK LKR6E 9N)	4	4				

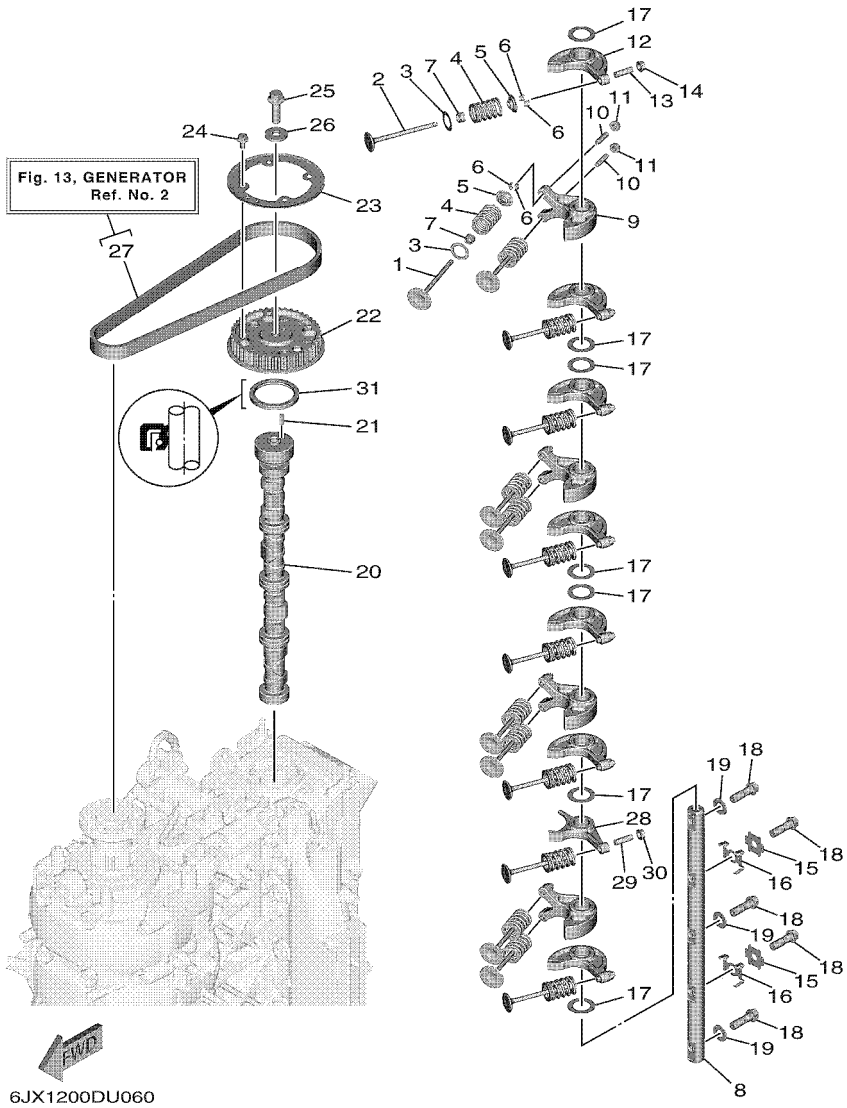

FIG. 6 VALVE — VALVULA

REF. NO.	PART NO. CODIGO Nº	DESCRIPTION DESCRIPCION	ET	EHT				REMARKS OBSERVACIONES
1	6JX–12111–00	VALVE, INTAKE VALVULA DE ADMISION	8	8				
2	6FP–12121–00	VALVE, EXHAUST VALVULA DE ESCAPE	8	8				
3	62Y–12116–00	SEAT, VALVE SPRING ASIENTO RESORTE DE VALVULA	16	16				
4	6FP–12113–00	SPRING, VALVE INNER RESORTE VALVULA INTERNA	16	16				
5	30X–12117–00	RETAINER, VALVE SPRING RETEN RESORTE DE VALVULA	16	16				
6	30X–12118–00	LOCK, VALVE SPRING RETAINER SEGURO DE VALVULA	32	32				
7	51Y–12119–00	SEAL, VALVE STEM SELLO DE ACEITE VALVULA	16	16				
8	6FP–12146–00	SHAFT, ROCKER ARBOL DE BALANCIN	1	1				
9	6FP–12151–00	ARM, VALVE ROCKER BRAZO DE BALANCIN DE VALVULA	4	4				
10	6C5–12159–00	SCREW, VALVE ADJUSTING TORNILLO DE AJUSTE DE VALVULA	8	8				
11	6C5–12158–00	NUT, LOCK ARANDELA DE SEGURIDAD	8	8				
12	6FP–12161–00	ARM, VALVE ROCKER 2 BRAZO DE BALANCIN DE VALVULA	7	7				
13	6C5–12159–10	SCREW, VALVE ADJUSTING TORNILLO DE AJUSTE DE VALVULA	7	7				
14	6C5–12158–10	NUT, LOCK ARANDELA DE SEGURIDAD	7	7				
15	6FP–12231–00	GUIDE, STOPPER 1 TOPE DE GUIA 1	2	2				
16	6FP–12233–00	PLATE, GUIDE STOPPER 1 PLACA DE TOPE DE GUIA 1	2	2				
17	90201–21016	WASHER, PLATE ARANDELA PLANA	7	7				
18	90401–10050	BOLT, UNION PERNO DE UNION	5	5				
19	92990–10200	WASHER, PLAIN ARANDELA PLANA	3	3				
20	6FP–12171–00	CAMSHAFT 1 ARBOL DE LEVAS 1	1	1				
21	93605–17002	PIN, DOWEL PASADOR DE CLAVIJA	1	1				
22	6FP–11537–00	GEAR, DRIVEN ENGRANAJE TRACCION	1	1				
23	6DA–11557–00	WASHER 1 ARANDELA 1	1	1				
24	95D95–06012	BOLT, FLANGE DEEP RECESS CERROJO, REBORDE HUECO PROFUND	4	4				
25	95817–10035	BOLT, FLANGE TORNILLO	1	1				
26	90201–10144	WASHER, PLATE ARANDELA PLANA	1	1				
27	6FP–W4624–00	BELT (WITH ROTOR BOLTS) CORREA (CON PERNO)	1	1				

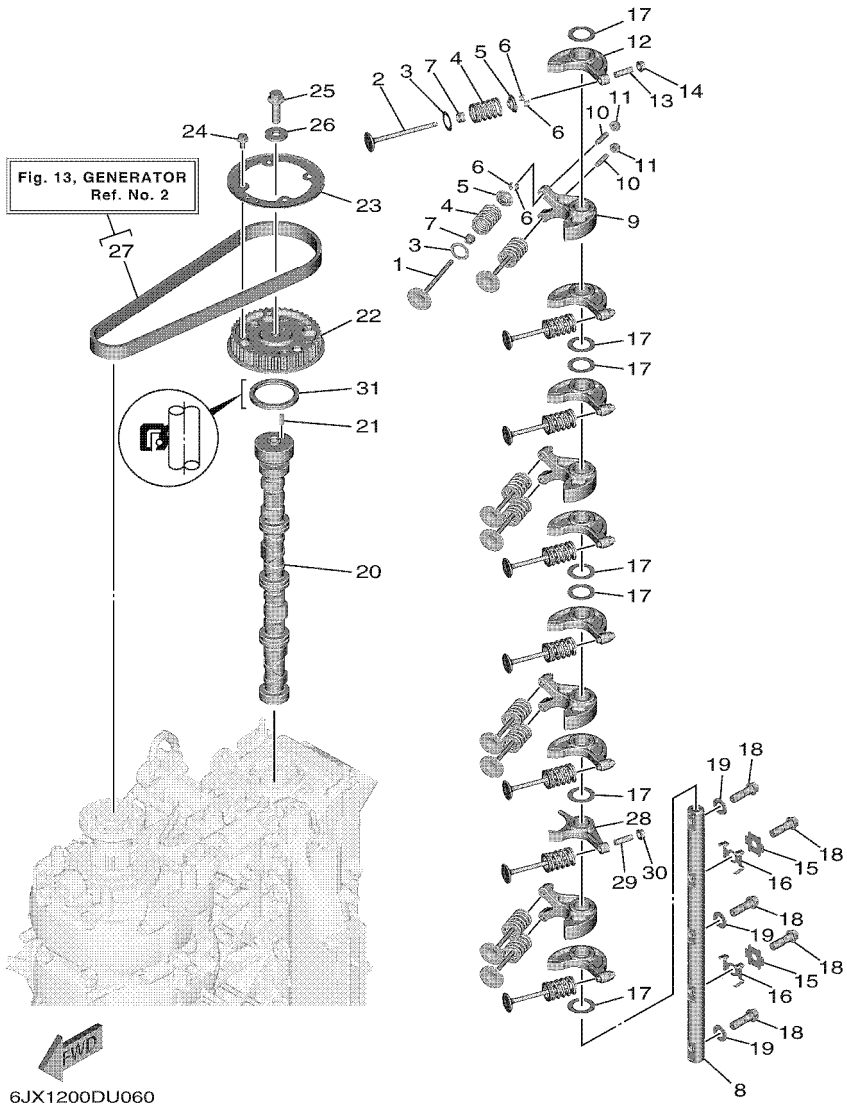

FIG. 6 VALVE — VALVULA

REF. NO.	PART NO. CODIGO Nº	DESCRIPTION DESCRIPCION	ET	EHT				REMARKS OBSERVACIONES
28	6FP–12162–10	ARM, VALVE ROCKER 3 BRAZO DE BALANCIN DE VALVULA	1	1				
29	6C5–12159–10	SCREW, VALVE ADJUSTING TORNILLO DE AJUSTE DE VALVULA	1	1				
30	6C5–12158–10	NUT, LOCK ARANDELA DE SEGURIDAD	1	1				
31	93102–48017	OIL SEAL SELLO ACEITE	1	1				

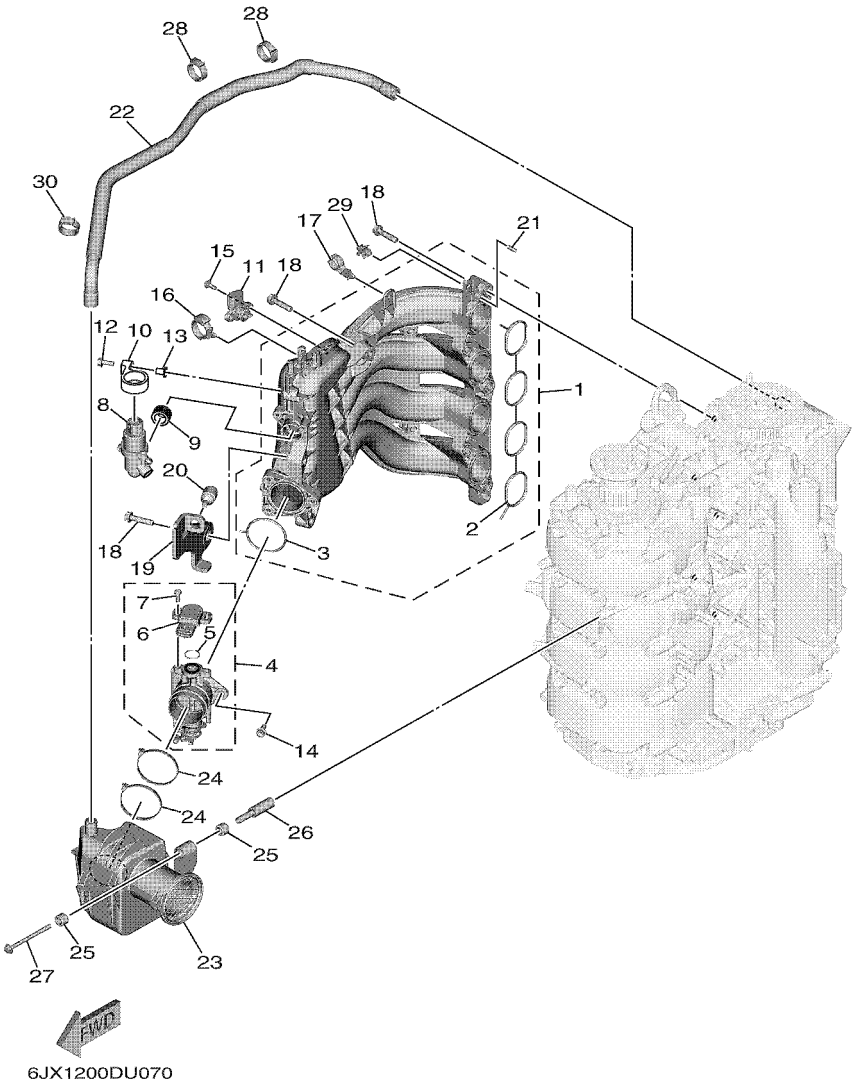

FIG. 7 INTAKE 1 — ADMISION 1

REF. NO.	PART NO. CODIGO Nº	DESCRIPTION DESCRIPCION	ET	EHT				REMARKS OBSERVACIONES
1	6FP–13641–00	MANIFOLD, INTAKE 1 CONECTOR DE ADMISSION 1	1	1				
2	6FP–13645–00	.GASKET, MANIFOLD 1 .EMPAQUE	1	1				
3	6FP–13646–00	.GASKET, MANIFOLD 2 .EMPAQ. DE MULTIPLE 2	1	1				
4	6FP–13751–01	BODY, THROTTLE 1 CAJA 1	1	1				
5	93210–17014	.O-RING .ANILLO O	1	1				
6	8GL–85885–01	.THROTTLE SENSOR ASSY .TERMICA SENSORIO	1	1				
7	90149–05041	.SCREW .TORNILLO DE REGLAJE	2	2				
8	6C5–13713–02	VALVE, IDLE SPEED CONTROL VALVULA, AJUSTE DE VELOCIDAD	1	1				
9	6FP–13476–00	GASKET EMPAQUE	1	1				
10	6FP–13381–00	DAMPER AMORTIGUADOR	1	1				
11	68F–83688–10	SENSOR ASSY SENSOR COMP.	1	1				
12	90119–06309	BOLT, WITH WASHER TORNILLO CON ARANDELA	1	1				
13	90387–06289	COLLAR ESPACIADOR	1	1				
14	6C5–14496–00	BOLT PERNO	3	3				
15	6C5–81146–10	SCREW 2 TORNILLO 2	2	2				
16	90464–12183	CLAMP BRIDA	1	1				
17	90464–17006	CLAMP BRIDA	1	1				
18	90119–08020	BOLT, WITH WASHER TORNILLO CON ARANDELA	8	8				
19	6FP–13371–00	PLATE PLACA	1	1				
20	6FP–14435–00	GROMMET ANILLO PROTECTOR	1	1				
21	91690–50014	PIN, SPRING PASADOR DE RESORTE	2	2				
22	6FP–15373–00	PIPE, BREATHER MANGUELA DE RESPIRADERO	1	1				
23	6HV–14440–01	SILENCER ASSY, INTAKE SILENCIADOR COMPL DE ADMISION	1	1				F75F F75F
	6FP–14440–02	SILENCER ASSY, INTAKE SILENCIADOR COMPL DE ADMISION	1	1				F100G F100G
24	90464–65001	CLAMP BRIDA	2	2				
25	90386–08001	BUSH BUJE	2	2				
26	90387–07013	COLLAR ESPACIADOR	1	1				

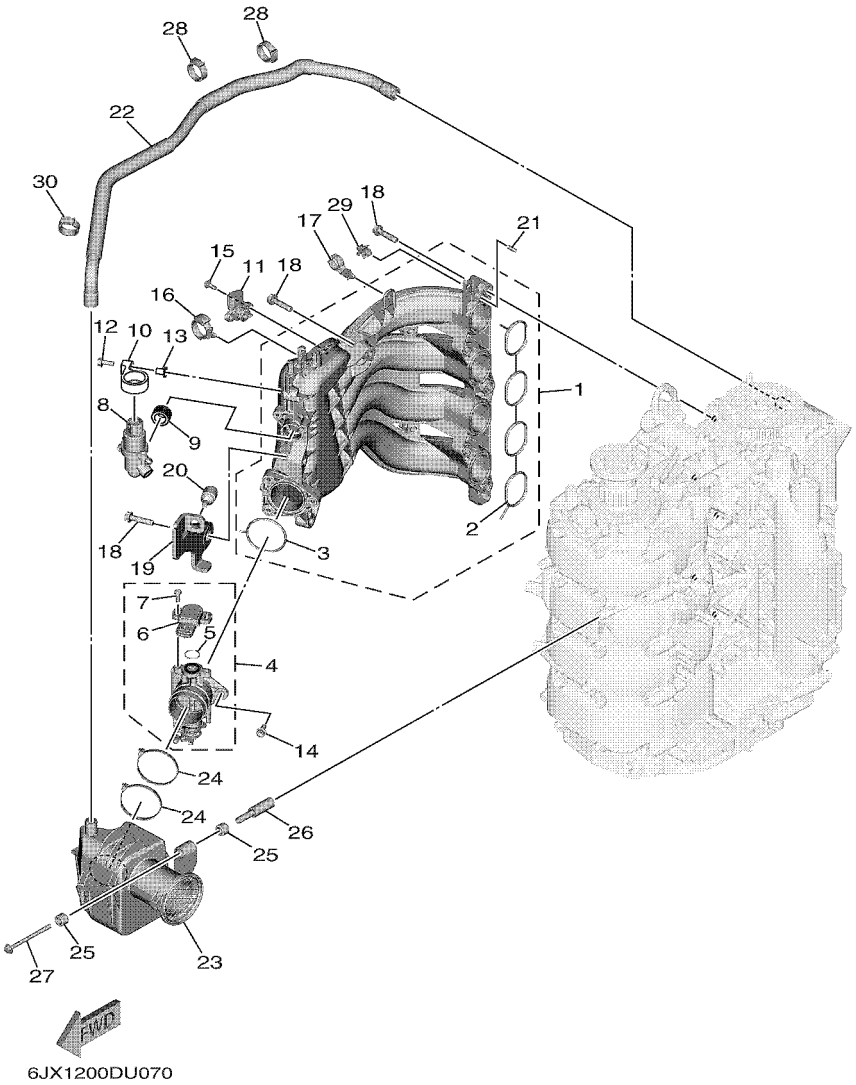

FIG. 7 INTAKE 1 — ADMISION 1

REF. NO.	PART NO. CODIGO Nº	DESCRIPTION DESCRIPCION	ET	EHT				REMARKS OBSERVACIONES
27	90119–06307	BOLT, WITH WASHER TORNILLO CON ARANDELA	1	1				
28	90464–26001	CLAMP BRIDA	2	2				
29	90464–09M47	CLAMP BRIDA	1	1				
30	90464–26001	CLAMP BRIDA	1	1				

FIG. 8 INTAKE 2 — ADMISION 2

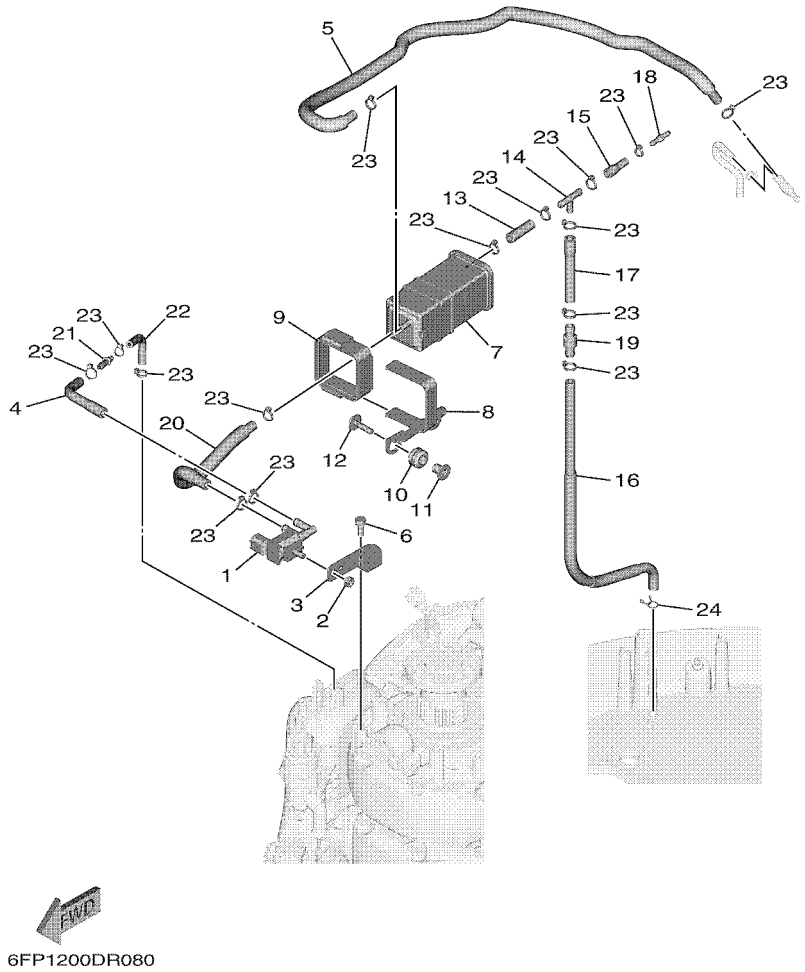

REF. NO.	PART NO. CODIGO Nº	DESCRIPTION DESCRIPCION	ET	EHT				REMARKS OBSERVACIONES
1	6C5–86120–00	SOLENOID VALVE ASSY VALVULA SOLENOIDE CONJ.	1	1				
2	95380–06600	NUT, HEXAGON TUERCA	1	1				
3	6FP–86112–00	STAY, SOLENOID SOPORTE SOLENOIDE	1	1				
4	6FP–2416A–00	HOSE TUBO DE COMBUSTIBLE	1	1				
5	6FP–1475A–00	PIPE 1 TUBO 1	1	1				
6	97E95–06516	BOLT, HEXAGON W/W DEEP RECESS TORNILLO HEXAGONAL CON RONDONA	1	1				
7	69J–24170–00	CANISTER ASSY FRANJA DE DEPOSITO DE COMBUST.	1	1				
8	6FP–2134X–00	BRACKET, CANISTER SOPORTE	1	1				
9	6FP–2419E–01	COVER, CANISTER CUBIERTA	1	1				
10	90480–10M23	GROMMET TAPON	2	2				
11	90387–06289	COLLAR ESPACIADOR	2	2				
12	90119–06309	BOLT, WITH WASHER TORNILLO CON ARANDELA	2	2				
13	6AW–13545–10	HOSE 1 SELLO	1	1				
14	688–24378–00	PIPE, JOINT 3 TUBO DE UNION 3	1	1				
15	6FP–13546–00	HOSE 2 SELLO	1	1				
16	6FP–13547–00	HOSE 3 SELLO	1	1				
17	6FP–13548–00	HOSE, AIR 4 TUBO DE AIRE 4	1	1				
18	6E5–21744–00	BREATHER RESPIRADERO	1	1				
19	63D–21744–00	BREATHER RESPIRADERO	1	1				
20	6FP–1475F–00	PIPE 3 TUBO 3	1	1				
21	6EK–14989–00	ORIFICE, AIR VENT ORIFICIO DE VENTILACION	1	1				
22	6FP–1475G–00	PIPE 4 TUBO 4	1	1				
23	90465–11M10	CLAMP BRIDA	15	15				
24	90467–09M17	CLIP PRESILLA	1	1				

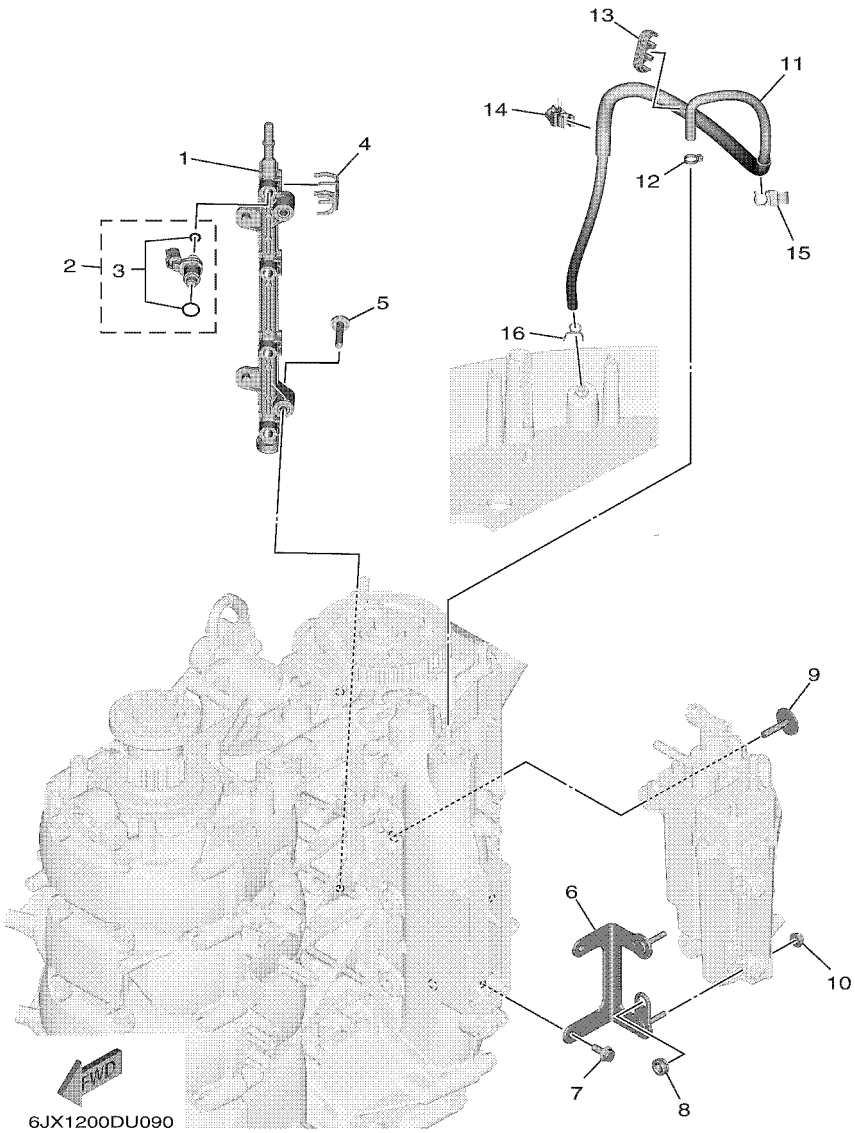

FIG. 9 INTAKE 3 — ADMISION 3

REF. NO.	PART NO. CODIGO Nº	DESCRIPTION DESCRIPCION	ET	EHT				REMARKS OBSERVACIONES
1	6FP–13161–00	PIPE, DELIVERY 1 TUBO CONDUCTOR 1	1	1				
2	6FP–13761–01	INJECTOR INYECTOR	4	4				
3	6C5–1410B–00	.PACKING KIT .JUEGO DE EMPAQUE	1	1				
4	6FP–13577–00	CLIP PRESILLA	4	4				
5	90119–06296	BOLT, WITH WASHER TORNILLO CON ARANDELA	2	2				
6	6FP–24422–00	PLATE PLACA	1	1				
7	95D95–06014	BOLT, FLANGE DEEP RECESS CERROJO, REBORDE HUECO PROFUND	2	2				
8	90480–11006	GROMMET TAPON	1	1				
9	90119–06291	BOLT, WITH WASHER TORNILLO CON ARANDELA	2	2				
10	90179–06M28	NUT TUERCA	2	2				
11	6FP–42542–00	PIPE TUBO	1	1				
12	90465–11M10	CLAMP BRIDA	1	1				
13	90464–10011	CLAMP BRIDA	1	1				
14	90464–09021	CLAMP BRIDA	1	1				
15	90464–09013	CLAMP BRIDA	1	1				
16	90467–08M18	CLIP PRESILLA	1	1				

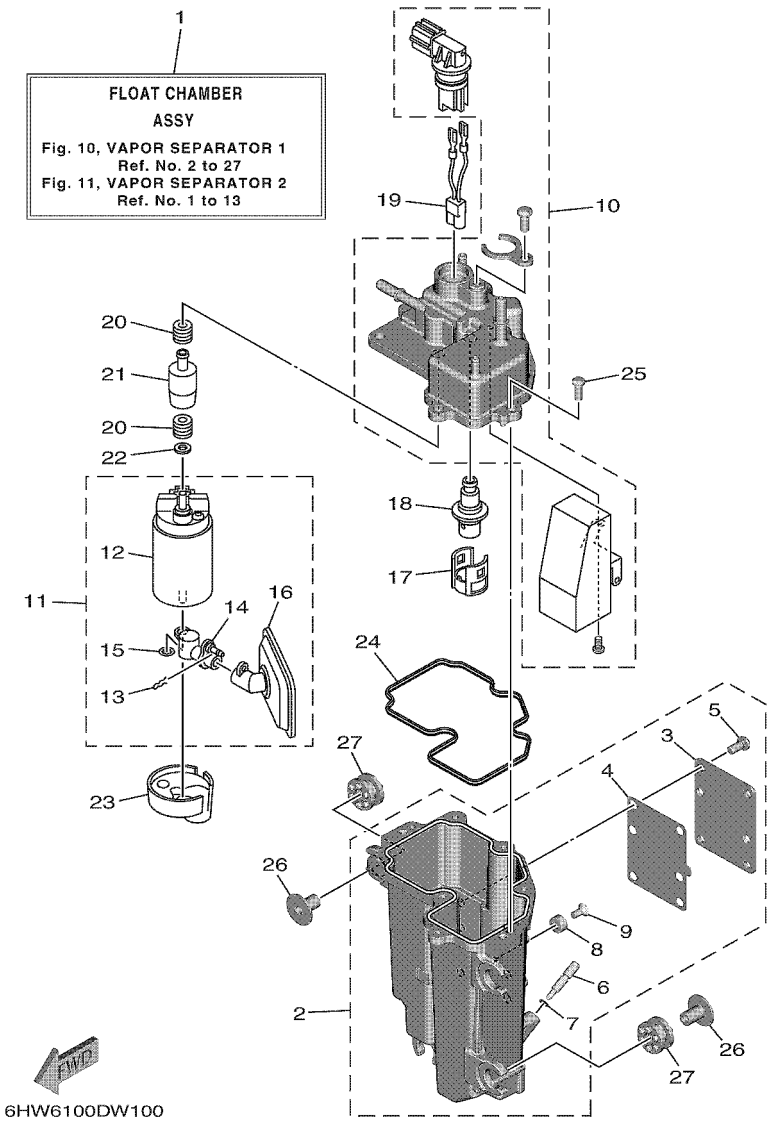

FIG. 10 VAPOR SEPARATOR 1 — SEPARADOR DE VAPOR 1

REF. NO.	PART NO. CODIGO Nº	DESCRIPTION DESCRIPCION	ET	EHT				REMARKS OBSERVACIONES
1	6FP–14180–03	FLOAT CHAMBER ASSY CAMARA DE BOYA COMPLETE	1	1				
2	6FP–14960–00	BODY ASSY CAJA COMPL.	1	1				
3	6FP–24452–00	.COVER, COOLER .CUBIERTA, ENFRIADOR	1	1				
4	6FP–24462–00	.GASKET, COOLER .EMPAQUE, ENFRIADOR	1	1				
5	6FP–14591–00	.SCREW .TORNILLO	6	6				
6	6C5–14191–00	.PLUG, DRAIN .TORNILLO, DE DRENAJE	1	1				
7	6C5–14397–00	.O-RING .ANILLO O	1	1				
8	63P–11325–21	.ANODE .ANODO	1	1				
9	6FP–24444–00	.SCREW .TORNILLO	1	1				
10	6FP–14182–01	COVER, FLOAT CHAMBER TAPA DE CAMARA DE BOIA	1	1				
11	6FP–13910–01	FUEL PUMP ASSY BOMBA DE COMBUSTIBLE COMPLETA	1	1				
12	6FP–13907–01	.FUEL PUMP COMP. .BOMBA DE COMBUSTIBLE COMPLETA	1	1				
13	6BG–14137–00	.CLIP .PRESILLA	1	1				
14	6FP–13938–00	.JOINT .TUBO DE ADMISION	1	1				
15	6C5–14127–10	.CLIP .PRESILLA	1	1				
16	6FP–13915–00	.FILTER .FILTRO	1	1				
17	6FP–13927–00	SUPPORT SOPORTE	1	1				
18	6FP–13906–00	REGULATOR, PRESSURE REGULADOR	1	1				
19	6FP–87226–00	WIRE HARNESS ASSY CONJUNTO DE CABLES	1	1				
20	6C5–13781–00	DAMPER, PUMP AMORTIGUADOR DE BOMBA	2	2				
21	6FP–13132–00	ADAPTOR JUNTA	1	1				
22	6FP–13716–00	SPECER, FUEL PUMP COLLAR	1	1				
23	6FP–13593–01	DAMPER COJINETE DE RODILLOS	1	1				
24	6FP–14984–00	GASKET, FLOAT CHAMBER EMPAQUE CAMARA DE BOIA	1	1				
25	6C5–14567–00	SCREW TORNILLO	8	8				
26	90387–06M03	COLLAR ESPACIADOR	4	4				
27	69L–85516–01	SPACER ESPACIADOR	4	4				

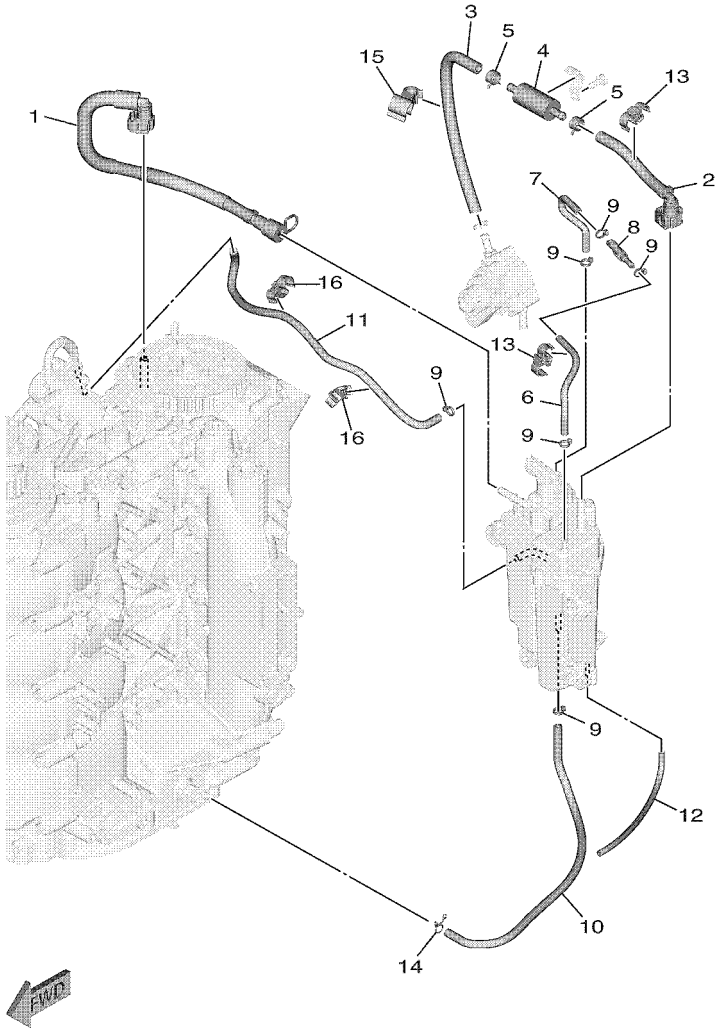

6JX1200DU110

FIG. 11 VAPOR SEPARATOR 2 — SEPARADOR DE VAPOR 2

REF. NO.	PART NO. CODIGO Nº	DESCRIPTION DESCRIPCION	ET	EHT				REMARKS OBSERVACIONES
1	6FP–13974–01	PIPE, FUEL 4 TUBO, COMBUSTIBLE 4	1	1				
2	6FP–24330–00	FUEL PIPE ASSY TUBO DE COMBUSTIBLE COMPL.	1	1				
3	6FP–13972–00	PIPE, FUEL 2 TUBO, COMBUSTIBLE 2	1	1				
4	6C5–24251–01	STRAINER 1 COLADOR 1	1	1				
5	6BG–24387–00	CLIP MORDAZA	2	2				
6	6FP–13545–00	HOSE 1 SELLO	1	1				
7	6FP–13546–00	HOSE 2 SELLO	1	1				
8	6FP–24379–00	PIPE, JOINT 4 TUBO DE UNION 4	1	1				
9	90465–11M10	CLAMP BRIDA	6	6				
10	6FP–24324–00	PIPE 13 TUBO 13	1	1				
11	6FP–24325–00	PIPE 14 TUBO 14	1	1				
12	6BG–14149–00	PIPE TUBO	1	1				
13	6FP–21337–00	CLAMP, CABLE GRAMPA DE CABLE	2	2				
14	90467–08M18	CLIP PRESILLA	1	1				
15	90464–15007	CLAMP BRIDA	1	1				
16	90464–12010	CLAMP BRIDA	2	2				

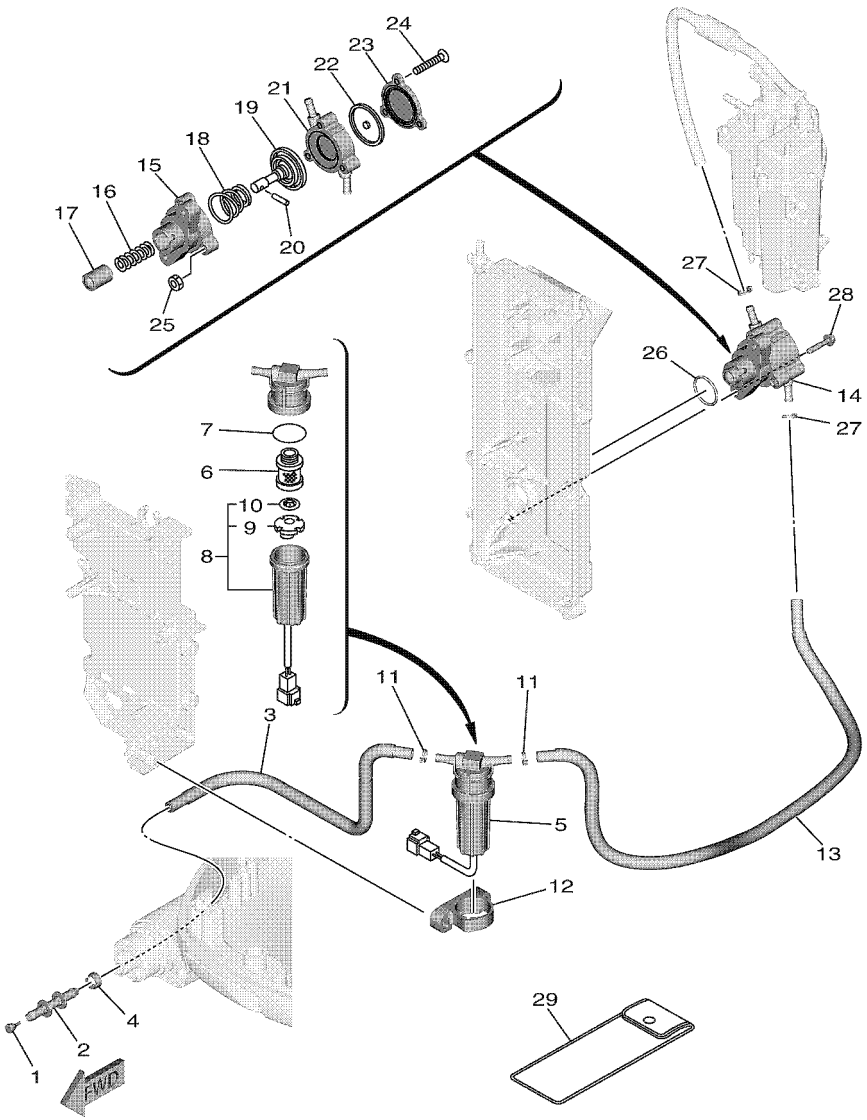

FIG. 12 FUEL — COMBUSTIBLE

REF. NO.	PART NO. CODIGO Nº	DESCRIPTION DESCRIPCION	ET	EHT				REMARKS OBSERVACIONES
1	689–85547–01	DAMPER AMORTIGUADOR	1	1				
2	6AW–24377–01	PIPE, JOINT 2 TUBO DE UNION 2	1	1				
3	6JX–24314–00	PIPE 4 TUBO 4	1	1				EXCEPT CAR(EPA CE) EXCEPT CAR(EPA CE)
	6FP–24314–00	PIPE 4 TUBO 4	1					FOR CAR(EPA CE) FOR CAR(EPA CE)
4	6E5–24351–51	BAND 1 ABRAZADERA 1	1	1				
5	6EK–24560–00	FILTER ASSY FILTRO COMPLETO	1	1				
6	6D8–24563–00	.ELEMENT, FILTER .ELEMENTO DEL FILTRO	1	1				
7	6D8–24564–00	.GASKET .EMPAQUE	1	1				
8	6D8–24562–00	.CUP, FILTER .COPA DE FILTRO	1	1				
9	6D8–24469–00	..FLOAT, WATER LEVEL ..BOIA	1	1				
10	6D8–24519–00	..CLIP ..PRESILLA	1	1				
11	90465–11M10	CLAMP BRIDA	2	2				
12	6FP–24568–01	BAND, FILTER BANDA DE FILTO	1	1				
13	6JX–24311–00	PIPE, FUEL 1 TUBO DE COMBUSTIBLE 1	1	1				EXCEPT CAR(EPA CE) EXCEPT CAR(EPA CE)
	6FP–24311–00	PIPE, FUEL 1 TUBO DE COMBUSTIBLE 1	1					FOR CAR(EPA CE) FOR CAR(EPA CE)
14	6FP–24410–00	FUEL PUMP ASSY BOMBA DE COMBUSTIBLE COMPLETA	1	1				
15	68V–24412–00	.BODY 1 .CUERPO 1	1	1				
16	68V–24454–00	.SPRING .RESORTE	1	1				
17	68V–13131–00	.PLUNGER .ESPACIADOR	1	1				
18	63P–24423–00	.SPRING, DIAPHRAGM .RESORTE DE DIAFRAGMA	1	1				
19	68V–24411–00	.DIAPHRAGM .DIAFRAGMA	1	1				
20	68V–24374–00	.PIN .PASADOR	1	1				
21	6FP–24413–00	.BODY 2 .CUERPO 2	1	1				
22	68V–24471–10	.DIAPHRAGM .DIAFRAGMA	1	1				
23	6FP–24414–00	.BODY 3 .CUERPO 3	1	1				
24	68V–24444–00	.SCREW .TORNILLO	3	3				
25	68V–24149–00	.NUT .TUERCA	3	3				

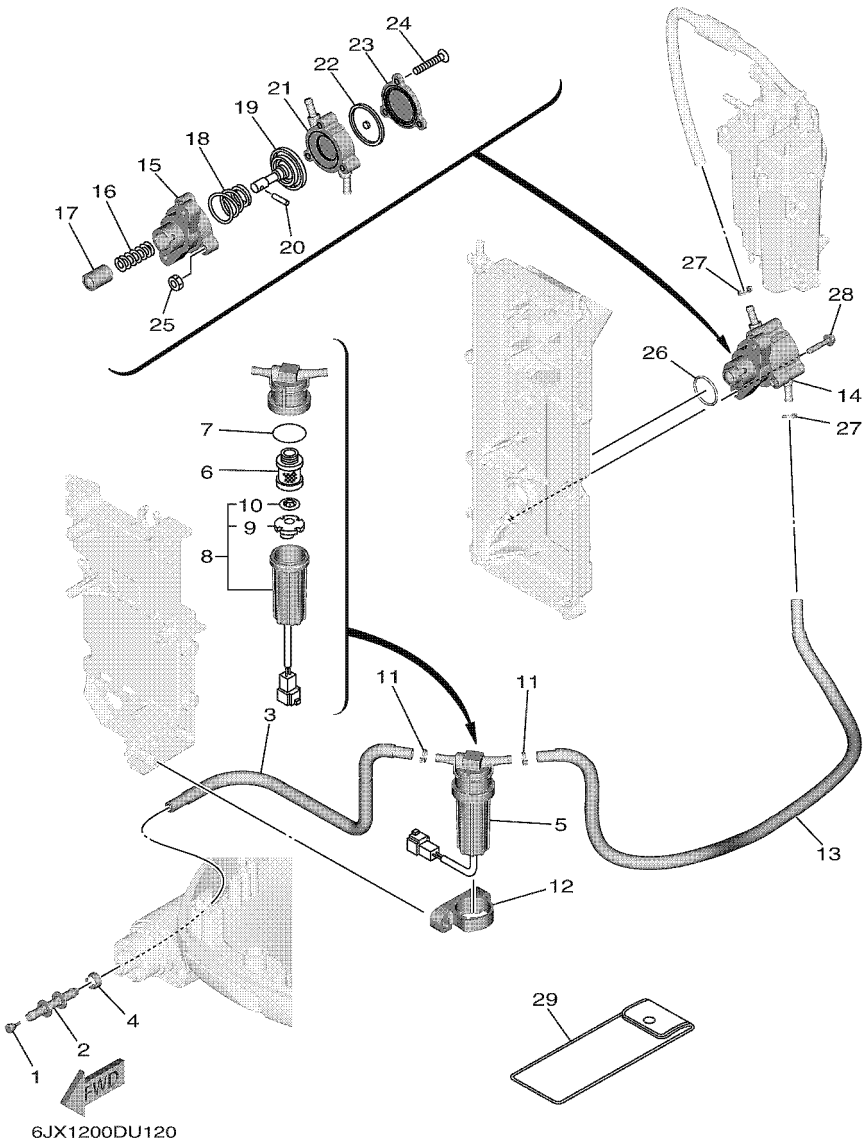

FIG. 12 FUEL — COMBUSTIBLE

REF. NO.	PART NO. CODIGO Nº	DESCRIPTION DESCRIPCION	ET	EHT				REMARKS OBSERVACIONES
26	93210–30682	O-RING ANILLO O	1	1				
27	90465–11M10	CLAMP BRIDA	2	2				
28	90105–06208	BOLT, FLANGE TORNILLO	2	2				
29	67F–28100–03	TOOL KIT JUEGO DE HERRAMIENTAS	1					FOR CAR FOR CAR
	67F–28100–12	TOOL KIT JUEGO DE HERRAMIENTAS	1	1				EXCEPT FOR CAR EXCEPT FOR CAR

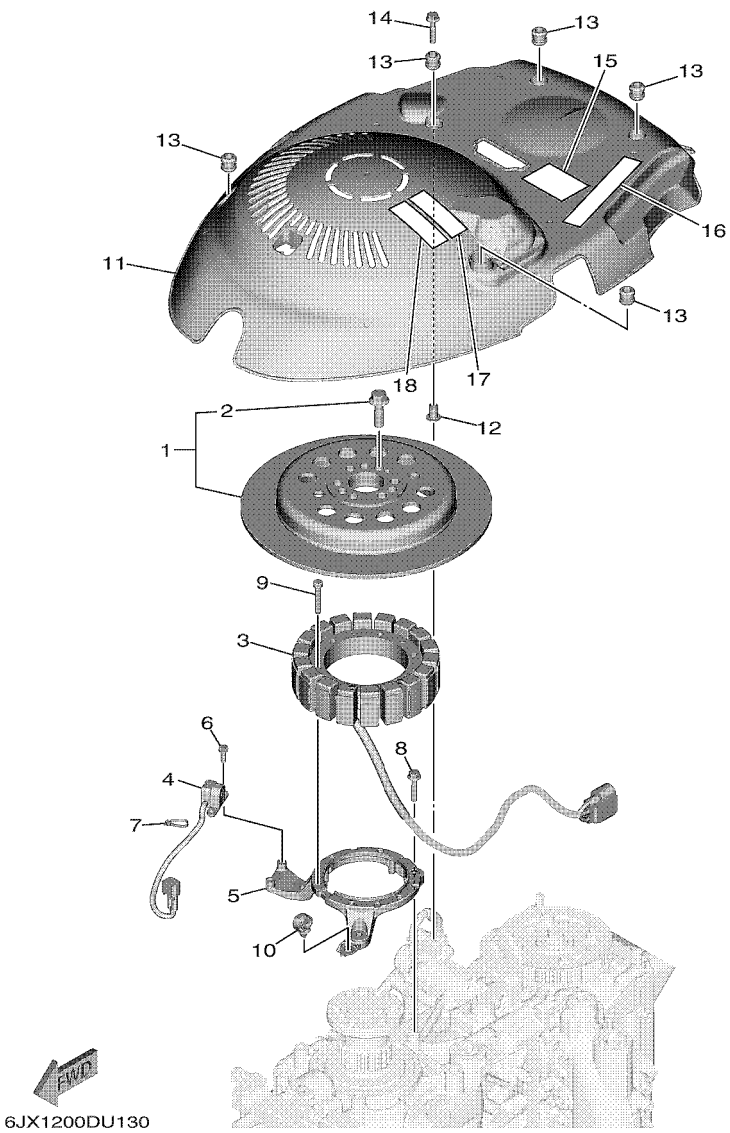

FIG. 13 GENERATOR GENERADOR

REF. NO.	PART NO. CODIGO Nº	DESCRIPTION DESCRIPCION	ET	EHT				REMARKS OBSERVACIONES
1	6FP–W8145–02	ROTOR ASSY WITH BOLTS ROTOR COMPLETO CON TORNILLO	1	1				
2	6FP–W9010–00	.BOLT SET .JUEGO DE TORNILLO	1	1				
3	6FP–81410–10	STATOR ASSY ESTATOR COMPLETO	1	1				
4	6CB–85580–01	COIL, PULSER BOBINA DE PULSACION	1	1				
5	6FP–85561–00	BASE, MAGNETO BASE DE MAGNETO	1	1				
6	90109–05M89	BOLT PERNO	2	2				
7	90465–11M10	CLAMP BRIDA	1	1				
8	95D95–06030	BOLT, FLANGE DEEP RECESS CERROJO, REBORDE HUECO PROFUND	3	3				
9	91312–06035	BOLT, HEXAGON SOCKET HEAD TORNILLO ALLEN	6	6				
10	90464–13249	CLAMP BRIDA	1	1				
11	6FP–81337–11	COVER, FLYWHEEL CUBIERTA DE VOLANTE	1	1				
12	90387–06119	COLLAR ESPACIADOR	1	1				
13	6A0–82317–01	DAMPER, IGNITION COIL AMORTIGUADOR BOBINA ENCENDIDO	5	5				
14	95D95–06030	BOLT, FLANGE DEEP RECESS CERROJO, REBORDE HUECO PROFUND	1	1				
15	6FP–83626–01	MARK 6 MARCA 6	1	1				
16	6EK–13437–62	MARK, CAUTION MARKER	1	1				
17	6EE–81994–41	LABEL, SAFETY ETIQUETA DE SEGURIDAD	1	1				
18	6EE–81994–51	LABEL, SAFETY ETIQUETA DE SEGURIDAD	1					FOR CAR(EPA CE) FOR CAR(EPA CE)

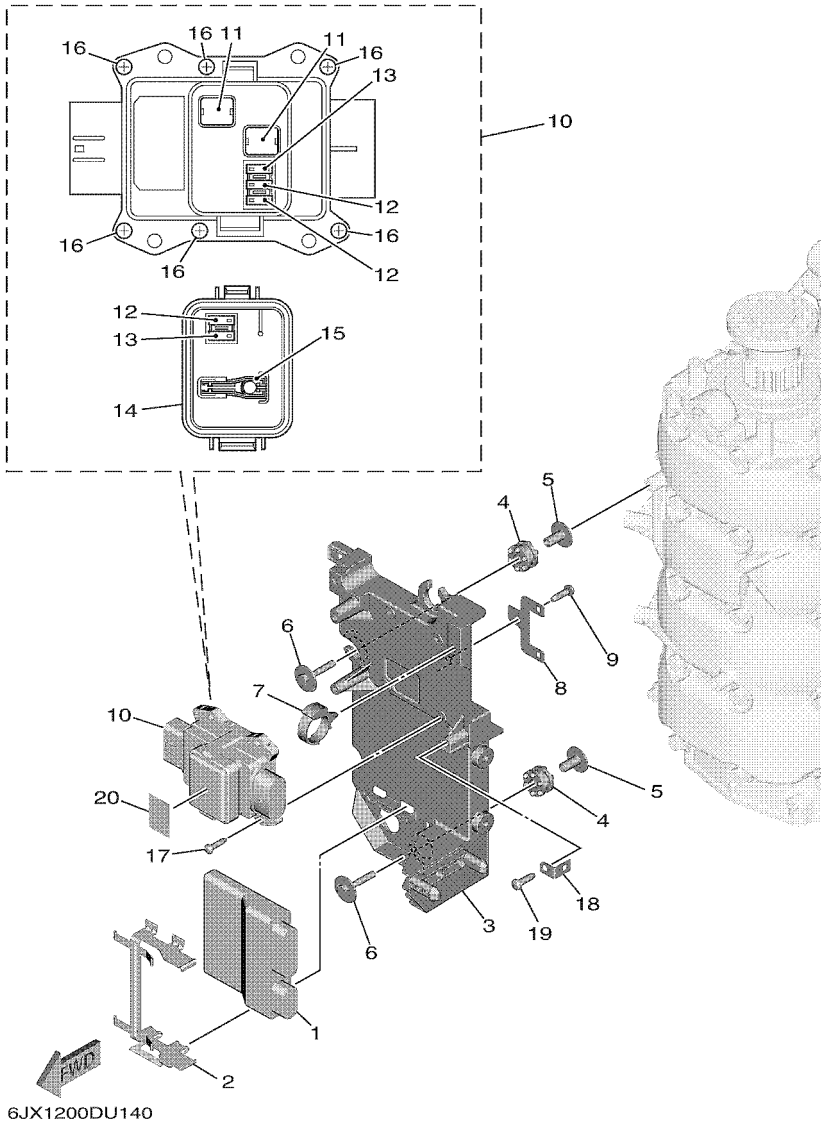

FIG. 14 ELECTRICAL 1 — EQUIPO ELECTRICO 1

REF. NO.	PART NO. CODIGO Nº	DESCRIPTION DESCRIPCION	ET	EHT				REMARKS OBSERVACIONES
1	6JX–8591A–02	ENGINE CONTROL UNIT ASSY UNIDAD CONTROL	1	1				F75F F75F
	6JY–8591A–02	ENGINE CONTROL UNIT ASSY UNIDAD CONTROL	1	1				F100G F100G
2	6FP–8253C–00	SPRING, PLATE LOCK RESORTE, PLACA DE CIERRE	1	1				
3	6FP–81948–10	BRACKET SOPORTE	1	1				
4	60V–85564–00	GROMMET ANILLO PROTECTOR	3	3				
5	90387–06176	COLLAR ESPACIADOR	3	3				
6	68F–85119–00	BOLT PERNO	3	3				
7	90464–12183	CLAMP BRIDA	1	1				
8	6C5–8257V–00	PLATE, CONNECTOR PLACA DE CONECTOR	1	1				
9	97780–60620	SCREW, TAPPING TORNILLO DE CABEZA DE CONO ACH	1	1				
10	6FP–82170–02	FUSE BOX ASSY CAJA DE FUSIBLES COMPL.	1	1				
11	6FP–82151–01	.FUSE (50A) .FUSIBLE (50A)	2	2				
12	6CB–82151–20	.FUSE (20A) .FUSIBLE (20A)	3	3				
13	6CB–82151–30	.FUSE (30A) .FUSIBLE (30A)	2	2				
14	6FP–85544–00	.COVER .CUBIERTA	1	1				
15	6CB–2812A–00	.PULLER, FUSE .TIRADOR DE FUSIBLE	1	1				
16	6P2–82113–00	.SCREW (M3) .TORNILLO (M3)	6	6				
17	97780–50620	SCREW, TAPPING TORNILLO DE CABEZA DE CONO ACH	4	4				
18	68V–85548–01	HOLDER SOSTEN	1	1				
19	97780–60620	SCREW, TAPPING TORNILLO DE CABEZA DE CONO ACH	1	1				
20	6FP–81919–01	GRAPHIC, REGULATOR CALCAMONIA DE REGULADOR	1	1				

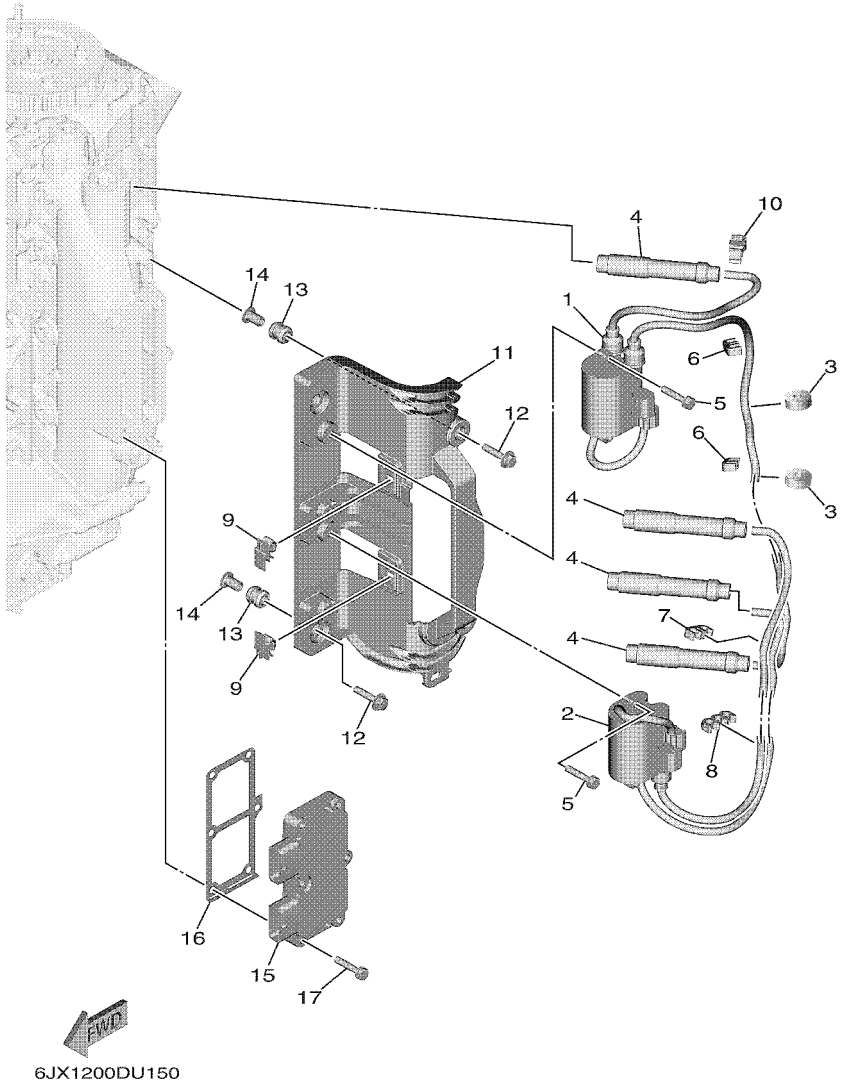

FIG. 15 ELECTRICAL 2 — EQUIPO ELECTRICO 2

REF. NO.	PART NO. CODIGO Nº	DESCRIPTION DESCRIPCION	ET	EHT				REMARKS OBSERVACIONES
1	6FP–82310–00	IGNITION COIL ASSY BOBINA DE ENCENDIDO COMPLETA	1	1				
2	6FP–82310–10	IGNITION COIL ASSY BOBINA DE ENCENDIDO COMPLETA	1	1				
3	90480–25161	GROMMET TAPON	2	2				
4	6EK–82370–00	PLUG CAP ASSY TAPON DE BUJIA COMPLT	4	4				
5	97E95–06525	BOLT, HEXAGON W/W DEEP RECESS TORNILLO HEXAGONAL CON RONDONA	4	4				
6	67F–82361–00	CLAMP, CORD GRAMPA DE CABLE	2	2				
7	67F–82361–00	CLAMP, CORD GRAMPA DE CABLE	1	1				
8	90464–07M05	CLAMP BRIDA	1	1				
9	90464–12002	CLAMP BRIDA	2	2				
10	90464–09013	CLAMP BRIDA	1	1				
11	6FP–82316–00	BRACKET, IGNITION COIL SOPORTE BOBINA ENCENDIDO	1	1				
12	90119–06294	BOLT, WITH WASHER TORNILLO CON ARANDELA	4	4				
13	6A0–82317–01	DAMPER, IGNITION COIL AMORTIGUADOR BOBINA ENCENDIDO	4	4				
14	90387–06119	COLLAR ESPACIADOR	4	4				
15	6EK–81960–10	RECTIFIER & REGULATOR ASSY RECTIFICADOR Y REGULADOR	1	1				
16	6FP–81975–00	PLATE, RECTIFIER FITTING PLACA ACCESORIA RECTIF.	1	1				
17	90119–06MA4	BOLT, WITH WASHER TORNILLO CON ARANDELA	6	6				

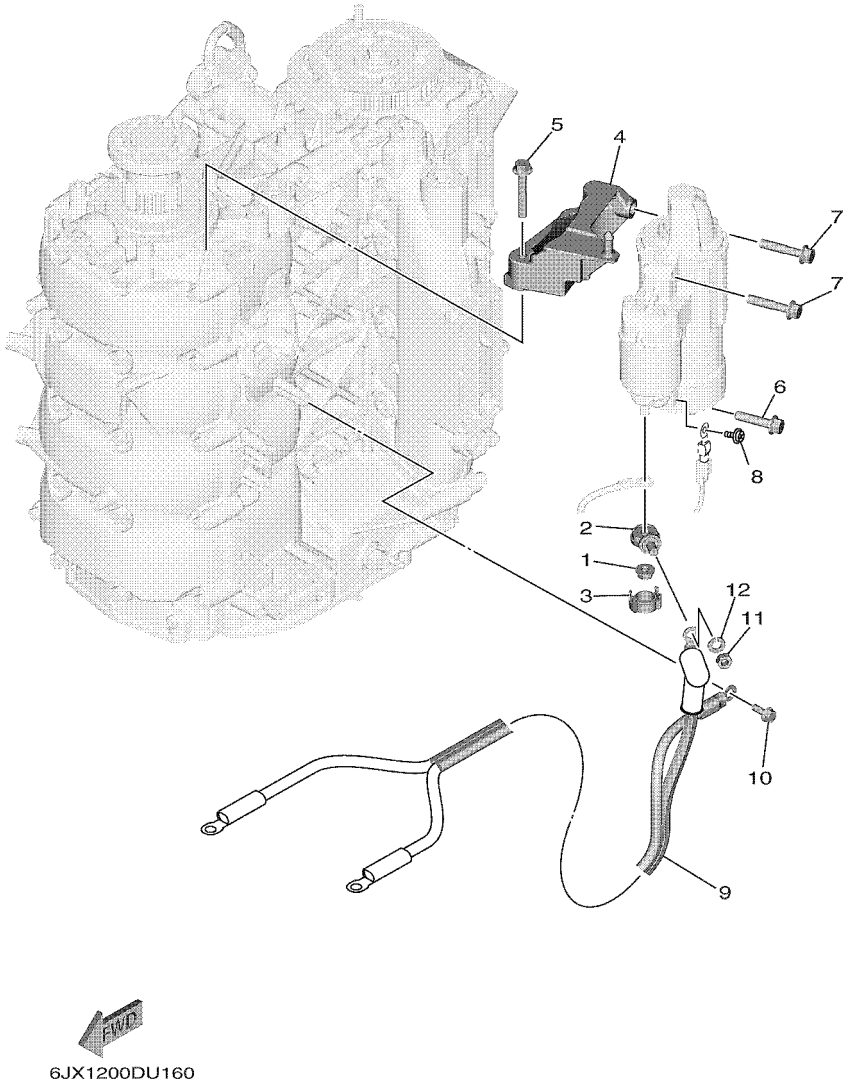

FIG. 16 ELECTRICAL 3 — EQUIPO ELECTRICO 3

REF. NO.	PART NO. CODIGO Nº	DESCRIPTION DESCRIPCION	ET	EHT				REMARKS OBSERVACIONES
1	90179–08003	NUT TUERCA	1	1				
2	60V–81925–00	TERMINAL TERMINAL	1	1				
3	68F–82582–00	CAP,1 TAPA 1	1	1				
4	6FP–81822–10	BRACKET, STARTING MOTOR SOPORTE DE MOTOR DE ARRANQUE	1	1				
5	95812–08050	BOLT, FLANGE TORNILLO DE REBORDE	2	2				
6	95817–08040	BOLT, FLANGE TORNILLO	1	1				
7	90105–08248	BOLT, FLANGE TORNILLO	2	2				
8	97985–04308	SCREW, WITH WASHER TORNILLO, CON ARANDELA	1	1				
9	68V–82105–02	BATTERY CABLE CABLE DE BATERIA	1	1				AP AP
10	90105–06M14	BOLT FLANGE TORNILLO	1	1				AP AP
11	95333–08600	NUT TUERCA	1	1				AP AP
12	92903–08100	WASHER, SPRING RONDANA SENCILLA	1	1				AP AP

FIG. 17 ELECTRICAL 4 — EQUIPO ELECTRICO 4

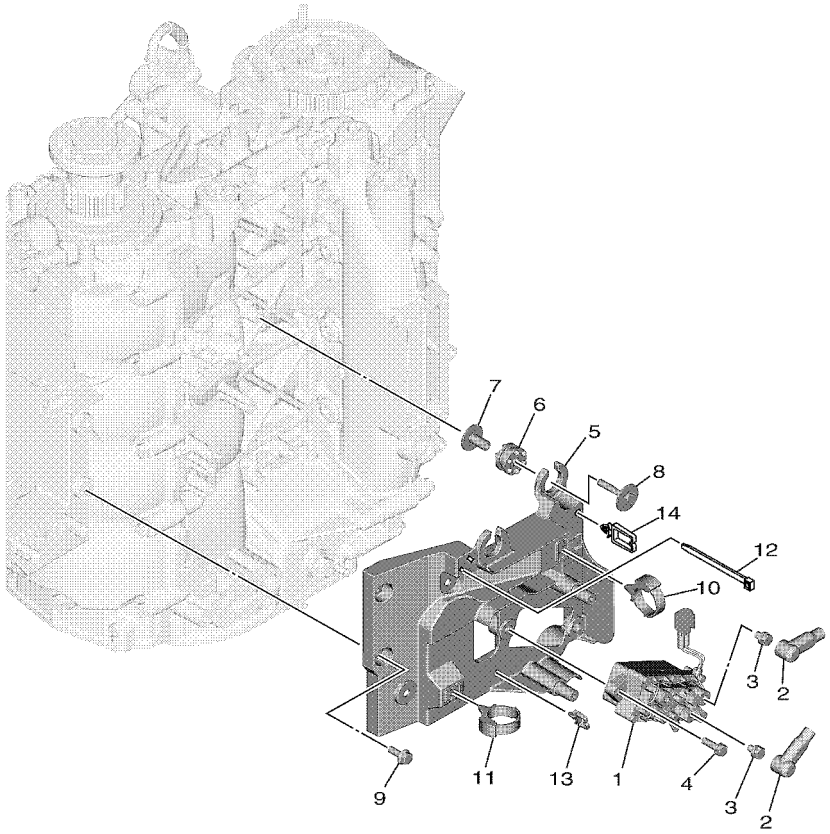

6JX1200DU170

REF. NO.	PART NO. CODIGO Nº	DESCRIPTION DESCRIPCION	ET	EHT				REMARKS OBSERVACIONES
1	63P–W8195–00	RELAY ASSY RELE COMPLETO	1	1				
2	682–82119–01	COVER, LEAD WIRE CUBIERTA DE CABLE CONDUCTOR	2	2				
3	97E95–06610	BOLT, HEXAGON W/W DEEP RECESS TORNILLO HEXAGONAL CON RONDONA	2	2				
4	97E95–06520	BOLT, HEXAGON W/W DEEP RECESS TORNILLO HEXAGONAL CON RONDONA	2	2				
5	6FP–81952–00	HOLDER, RELAY SOSTEN DE RELE	1	1				
6	68F–85516–01	SPACER ESPACIADOR	3	3				
7	90387–06176	COLLAR ESPACIADOR	3	3				
8	68F–85119–00	BOLT PERNO	3	3				
9	95D95–06016	BOLT, FLANGE DEEP RECESS CERROJO, REBORDE HUECO PROFUND	2	2				
10	90464–12183	CLAMP BRIDA	1	1				
11	90464–12183	CLAMP BRIDA	1	1				
12	90465–13M11	CLAMP BRIDA	1	1				
13	90464–11121	CLAMP BRIDA	1	1				
14	90464–05141	CLAMP BRIDA	1	1				

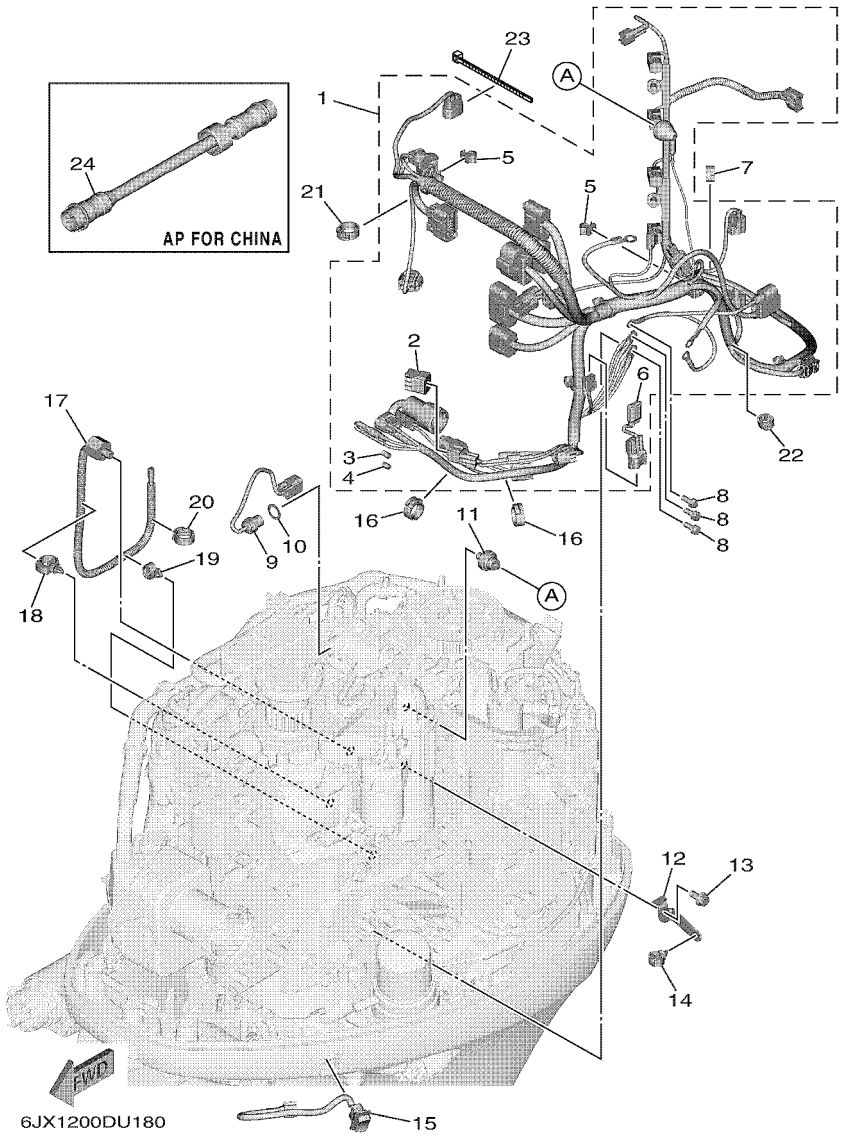

FIG. 18 ELECTRICAL 5 — EQUIPO ELECTRICO 5

REF. NO.	PART NO. CODIGO Nº	DESCRIPTION DESCRIPCION	ET	EHT				REMARKS OBSERVACIONES
1	6FP–82590–12	WIRE HARNESS ASSY CONJUNTO DE CABLES	1					
	6JX–82590–02	WIRE HARNESS ASSY CONJUNTO DE CABLES		1				
2	6Y8–82582–11	.CAP 1 (4PIN) .TAPA 1 (4P)	1	1				
3	6DA–82582–00	.CAP 1 (FEMALE) .TAPA 1	1	1				
4	6DA–82582–10	.CAP 1 (MALE) .TAPA 1	1	1				
5	90464–09M47	.CLAMP .BRIDA	2	2				
6	6FM–81980–01	.DIODE ASSY .CONJUNTO DIODO	1	1				
7	90464–13227	CLAMP BRIDA	1	1				
8	97E95–06516	BOLT, HEXAGON W/W DEEP RECESS TORNILLO HEXAGONAL CON RONDONA	3	3				
9	6CJ–85790–00	THERMOSENSOR ASSY TERMICA SENSORIO	1	1				
10	90430–14115	GASKET JUNTA	1	1				
11	68V–82504–00	OIL PRESSURE SWITCH ASSY INTERRUPTOR PRESION DE ACEITE	1	1				
12	6JX–85548–00	HOLDER SOSTEN	1	1				
13	95D95–06016	BOLT, FLANGE DEEP RECESS CERROJO, REBORDE HUECO PROFUND	1	1				
14	90464–13249	CLAMP BRIDA	1	1				
15	6FM–82563–01	TRIM & TILT SWITCH ASSY INTERRUPTOR DE INCLINACION	1	1				
16	90464–16001	CLAMP BRIDA	2	2				
17	6CJ–85780–02	SENSOR, KNOCK CHOCAR SENSORIO	1	1				
18	90464–20181	CLAMP BRIDA	1	1				
19	90464–13249	CLAMP BRIDA	1	1				
20	90464–16001	CLAMP BRIDA	1	1				
21	90464–16001	CLAMP BRIDA	1	1				
22	90464–13227	CLAMP BRIDA	1	1				
23	90465–13M97	CLAMP BRIDA	1	1				
24	688–8258A–10	EXTENSION, WIRE HARNESS (2M) EXTENSION, ARNES DE CABLES (2M	1					AP FOR CHN (10P) AP FOR CHN (10P)

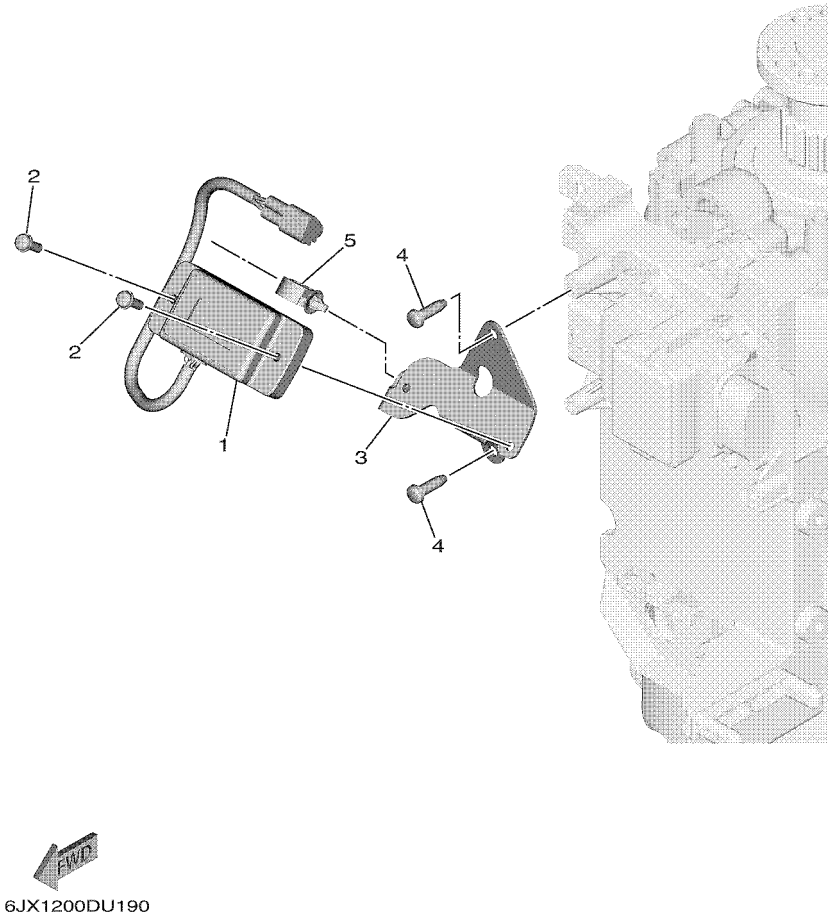

FIG. 19 ELECTRICAL 6 — EQUIPO ELECTRICO 6

REF. NO.	PART NO. CODIGO Nº	DESCRIPTION DESCRIPCION	ET	EHT				REMARKS OBSERVACIONES
1	6Y5–83504–24	HOUR METER ASSY MEDIDOR DE HORAS COMPLETO		1				
2	90159–05M26	SCREW, WITH WASHER TORNILLO CON VALONA		2				
3	6JX–83519–00	BRACKET, METER SOPORTE DE MEDIDOR		1				
4	97780–60620	SCREW, TAPPING TORNILLO DE CABEZA DE CONO ACH		2				
5	90464–13249	CLAMP BRIDA		1				

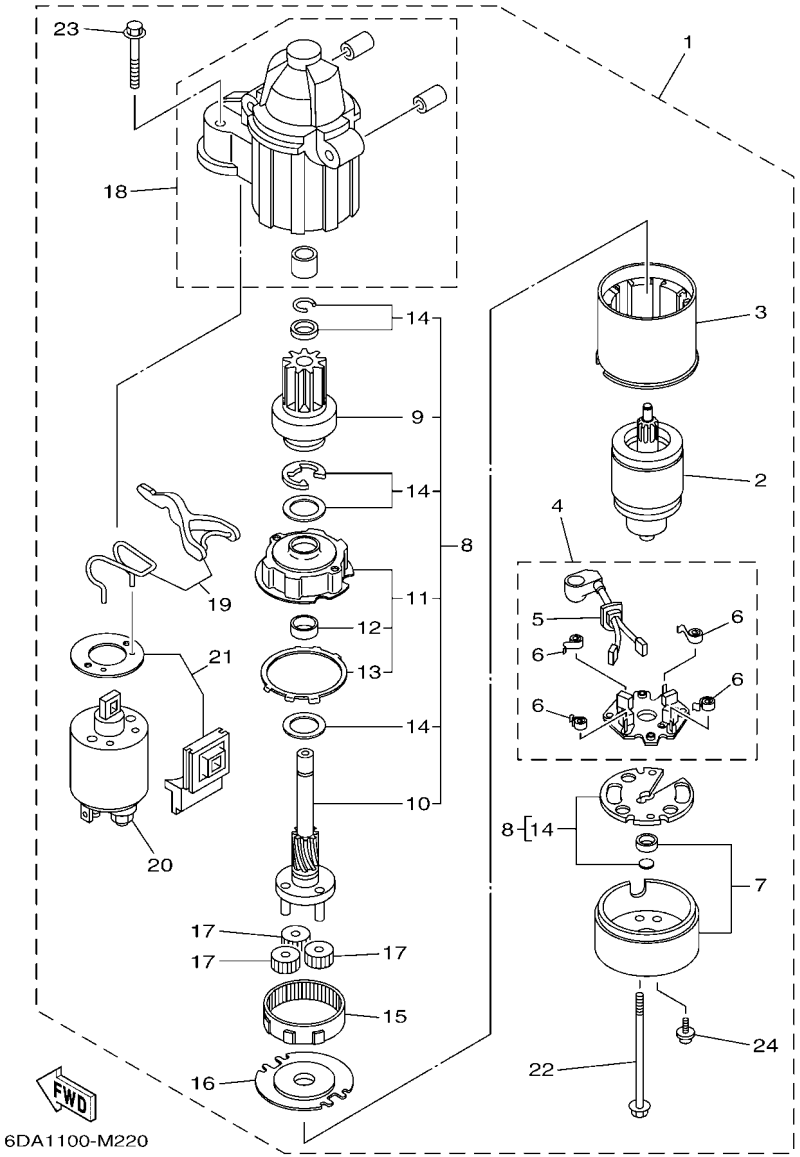

FIG. 20 STARTING MOTOR — MOTOR DE ARRANQUE

REF. NO.	PART NO. CODIGO Nº	DESCRIPTION DESCRIPCION	ET	EHT				REMARKS OBSERVACIONES
1	6EM–81800–02	STARTING MOTOR ASSY MOTOR DE ARRANQUE COMPLETO	1	1				
2	67F–81850–00	.ARMATURE ASSY .INDUCIDO COMPLETO	1	1				
3	67F–81810–00	.STATOR ASSY .ESTATOR COMPLETO	1	1				
4	69J–81840–11	.BRUSH HOLDER ASSY .SOSTEN DE ESCOBILLA COMPLETO	1	1				
5	69J–81801–11	..BRUSH SET ..JUEGO DE ESCOBILLA	1	1				
6	67F–81813–00	..SPRING, BRUSH ..RESORTE DE ESCOBILLA	4	4				
7	6CB–81820–00	.REAR BRACKET ASSY .CUBIERTA TRASERA COMPL	1	1				
8	6CB–81807–00	.GEAR ASSY, STARTING MOTOR .PINON CONJUNTO	1	1				
9	6CB–81832–00	..CLUTCH, OVER RUN ..PINON COMPL	1	1				
10	6CB–81836–00	..SHAFT, PINION ..ARBOL, PINON	1	1				
11	67F–81821–00	..BRACKET, CENTER 1 ..SOPORTE, CENTRO 1	1	1				
12	67F–81841–00	...BEARING ...PORTADOR	1	1				
13	67F–8183R–00	...GASKET ...EMPAQUETADURA	1	1				
14	6CB–81809–00	..WASHER KIT ..JUEGO DE ARANDELA	1	1				
15	67F–81891–00	.GEAR, RING .ENGRANAJE ANILLO	1	1				WITH 67F-8183R-00 WITH 67F-8183R-00
16	67F–81830–00	.BRACKET, CENTER 2 .SOPORTE, CENTRO 2	1	1				
17	60V–8183T–00	.GEAR, IDLER .ENGRENAJE NEUTRO	3	3				
18	6CB–81842–00	.COVER .TAPA	1	1				
19	6C5–81839–00	.LEVER ASSY .PALANCA COMPL.	1	1				
20	6EM–81941–01	.STARTER RELAY ASSY .RELE DE ARRANQUE	1	1				
21	6C5–81869–00	.COVER, DUST .CUBIERTA PARA POLVO	1	1				
22	6CB–81826–00	.BOLT .PERNO	2	2				
23	69J–81828–00	.BOLT 2 .TORNILLO DE EMPUJE 2	2	2				
24	67F–81846–00	.SCREW .TORNILLO	2	2				

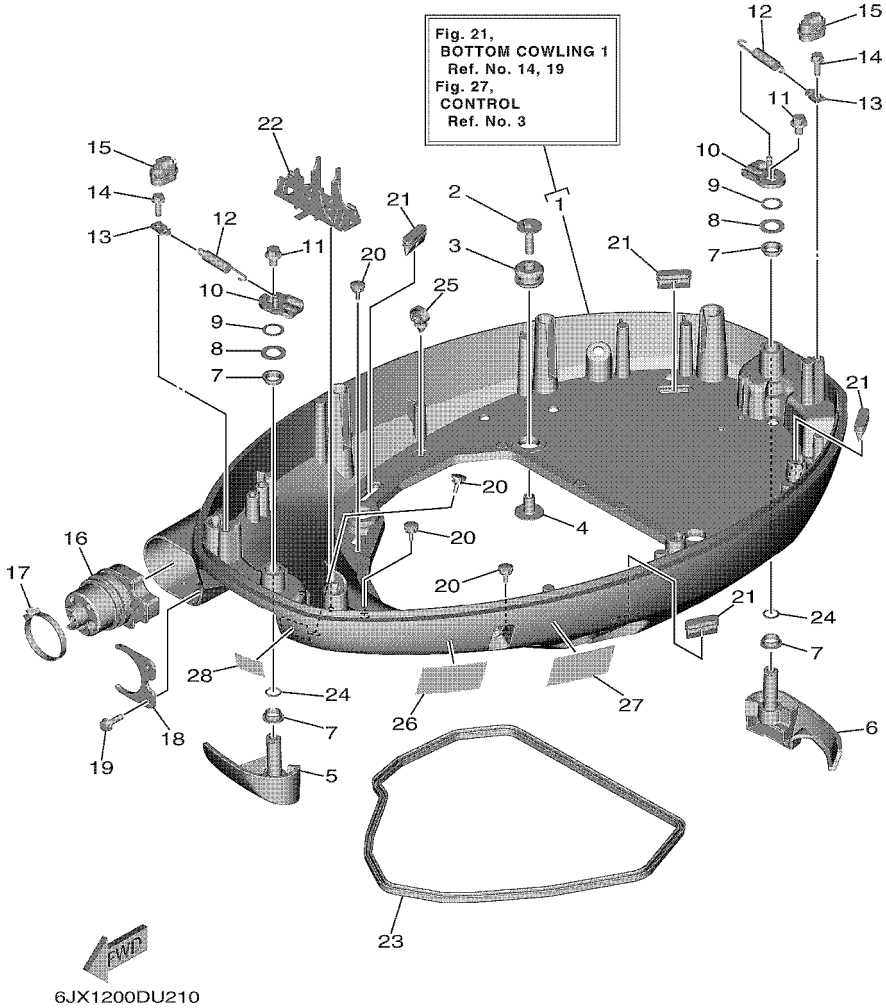

FIG. 21 BOTTOM COWLING 1 — CUBIERTA INFERIOR 1

REF. NO.	PART NO. CODIGO Nº	DESCRIPTION DESCRIPCION	ET	EHT				REMARKS OBSERVACIONES
1	6FP–42710–01–8D	BOTTOM COWLING ASSY CUBIERTA INFERIOR COMPL.	1	1				
2	90119–08187	BOLT, WITH WASHER TORNILLO CON ARANDELA	4	4				
3	90480–22M15	GROMMET TAPON	4	4				
4	90387–08M37	COLLAR ESPACIADOR	4	4				
5	6FP–42815–00–8D	LEVER, CLAMP 1 PALANCA ABRAZADERA 1	1	1				
6	6FP–42816–00–8D	LEVER, CLAMP 2 PALANCA ABRAZADERA 2	1	1				
7	90386–15M73	BUSH BUJE	4	4				
8	90201–156J2	WASHER, PLATE ARANDELA PLANA	2	2				
9	90206–15M18	WASHER, WAVE ARANDELA ONDULADA	2	2				
10	6CB–42818–00	LEVER, CLAMP 4 PALANCA, ABRAZADERA 4	2	2				
11	95D95–08012	BOLT, FLANGE DEEP RECESS CERROJO, REBORDE HUECO PROFUND	2	2				
12	90506–22001	SPRING, TENSION RESORTE DE TENSION	2	2				
13	66T–43144–00	HOOK, SPRING GANCHO	2	2				
14	90109–06M86	BOLT PERNO	2	2				
15	6EK–42728–01	CAP TAPA	2	2				
16	6EK–42725–10	GROMMET TAPON	1	1				
17	90465–13M30	CLAMP BRIDA	1	1				
18	6CB–42761–00	STOPPER RETEN 1	1	1				
19	90109–06316	BOLT PERNO	2	2				
20	6H4–42748–01	GROMMET TAPON	4	4				
21	67F–42717–00	RUBBER, SEAL 2 GOMA	4	4				
22	68V–82594–00	CLAMP GRAMPA	1	1				
23	6EK–42716–01	RUBBER SEAL 1 SELLO DE GOMA 1	1	1				
24	93210–13M63	O-RING ANILLO O	2	2				
25	90464–13249	CLAMP BRIDA	1	1				
26	6EE–42794–41	LABEL, WARNING (GENERAL) ETIQUETA DE PRECAUCION	1	1				
27	6EE–42794–51	LABEL, WARNING (GENERAL) ETIQUETA DE PRECAUCION	1					FOR CAR(EPA CE) FOR CAR(EPA CE)

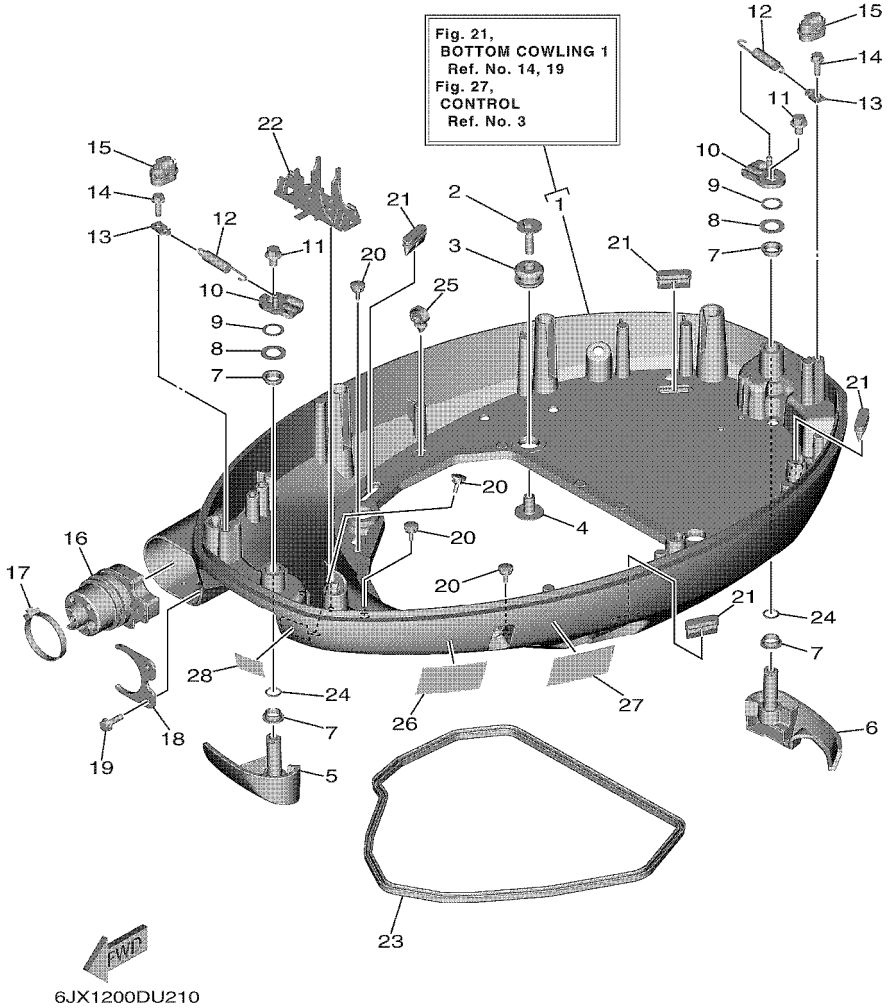

FIG. 21 BOTTOM COWLING 1 — CUBIERTA INFERIOR 1

REF. NO.	PART NO. CODIGO Nº	DESCRIPTION DESCRIPCION	ET	EHT				REMARKS OBSERVACIONES
28	6AH–81996–01	MARK MARCA	1					FOR CAR(EPA CE) FOR CAR(EPA CE)

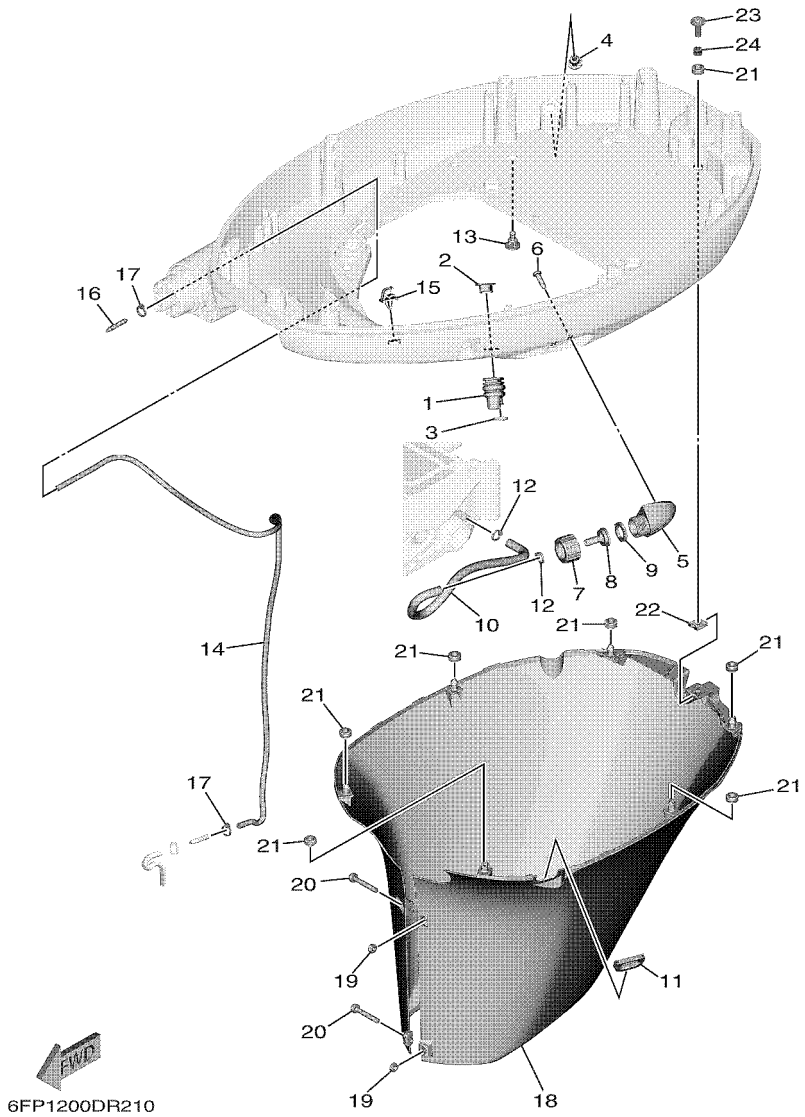

FIG. 22 BOTTOM COWLING 2 — CUBIERTA INFERIOR 2

REF. NO.	PART NO. CODIGO Nº	DESCRIPTION DESCRIPCION	ET	EHT				REMARKS OBSERVACIONES
1	6H1–42726–31	GROMMET TAPON	1	1				
2	6BG–42384–00	SEAL, CAP SELLO DE TAPA	1	1				
3	90465–11M10	CLAMP BRIDA	1	1				
4	6P2–44391–00	NIPPLE, HOSE NIPLE MANGUERA	1	1				
5	6AW–12572–00	ADAPTER ADAPTADOR	1	1				
6	97780–60520	SCREW, TAPPING TORNILLO DE CABEZA DE CONO ACH	2	2				
7	6R3–12581–00	JOINT, HOSE 1 CONEXION	1	1				
8	6R3–12582–00	JOINT, HOSE 2 CONEXION	1	1				
9	6R3–12583–00	GASKET, HOSE JOINT EMPAQUETADURA JUNTA DE MANGUE	1	1				
10	6EK–42541–00	PIPE 1 TUBO 1	1	1				
11	6AH–42726–01	GROMMET TAPON	1	1				
12	90465–11M10	CLAMP BRIDA	2	2				
13	6P2–44391–00	NIPPLE, HOSE NIPLE MANGUERA	1	1				
14	90445–073F9	HOSE (L1200) TUBO (L1200)	1	1				
15	90464–07259	CLAMP BRIDA	1	1				
16	6E5–83558–00	END, NIPPLE EXTREMO DE NIPLE	1	1				
17	90465–11M10	CLAMP BRIDA	2	2				
18	6FP–42741–00–8D	APRON, 1 MANDIL 1	1	1				
19	95380–06600	NUT, HEXAGON TUERCA	2	2				
20	90159–06M28	SCREW, WITH WASHER TORNILLO CON VALONA	2	2				
21	90480–13M24	GROMMET TAPON	7	7				
22	90183–061A8	NUT, SPRING TUERCA DE RESORTE	1	1				
23	90159–06053	SCREW, WITH WASHER TORNILLO CON VALONA	1	1				
24	90387–06M43	COLLAR ESPACIADOR	1	1				

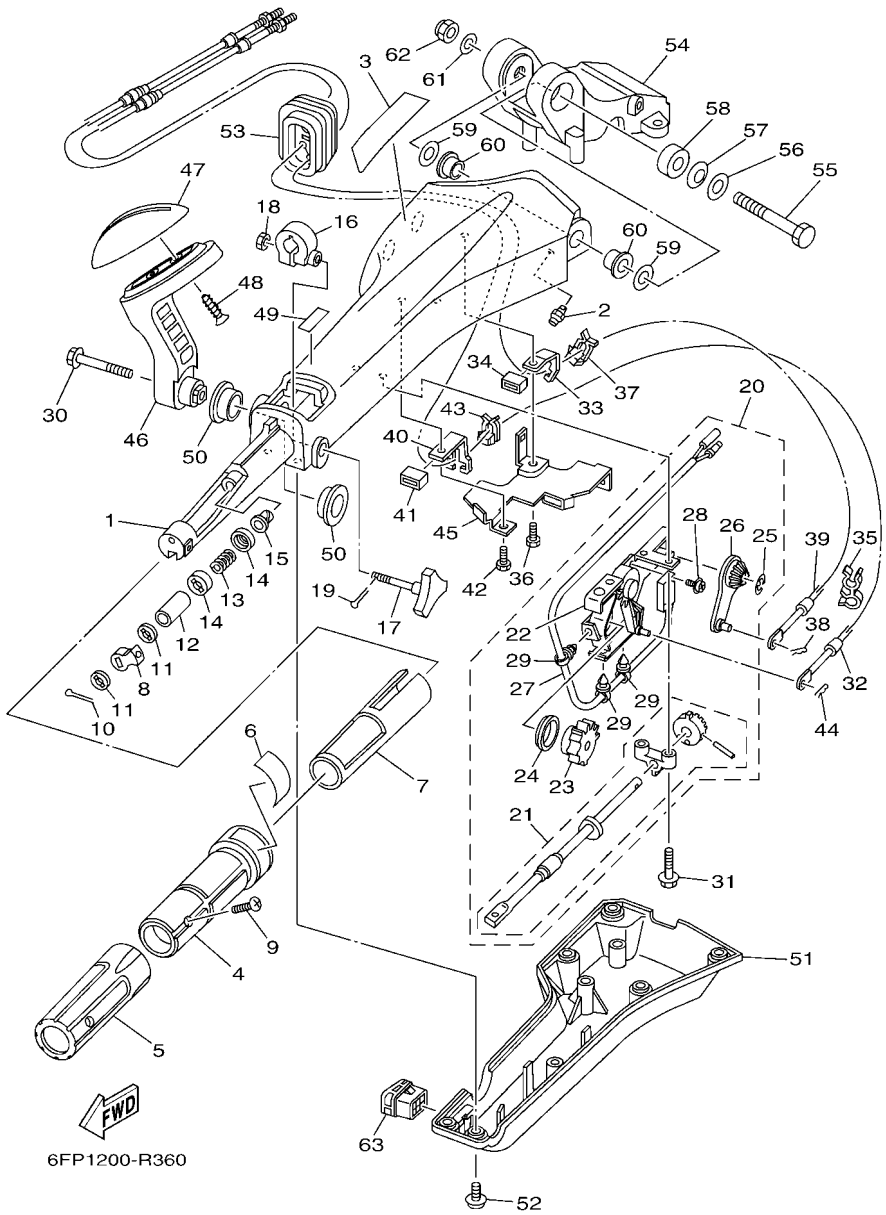

FIG. 23 STEERING 1 — DIRECCION 1

REF. NO.	PART NO. CODIGO Nº	DESCRIPTION DESCRIPCION	ET	EHT				REMARKS OBSERVACIONES
1	6X4–42111–02–8D	HANDLE, STEERING MANIJA DE DIRECCION		1				
2	93700–06002	NIPPLE, GREASE BOQUILLA DE ENGRASAR		1				
3	6X4–48215–00	GRAPHIC CALCOMANIA 1		1				
4	6X4–42119–01	GRIP, STEERING HANDLE MANGO, MANIJA DE DIRRECCION		1				
5	6X4–42177–01	RUBBER, HANDLE HULE DE MANIJA		1				
6	6X4–42137–00	INDICATOR, THROTTLE INDICADOR ACELERADOR		1				
7	6X4–41291–00	BUSHING BUJE		1				
8	6X4–44139–01	COLLAR COLLAR		1				
9	90152–05007	SCREW, COUNTERSUNK TORNILLO EMBUTIDO		1				
10	91490–20010	PIN. COTTER CHAVETA		1				
11	6X4–44177–00	WASHER RONDANA		2				
12	6X4–42128–00	COLLAR, DISTANCE 1 COLLAR DISTANCIADOR 1		1				
13	90501–23215	SPRING, COMPRESSION RESORTE DE COMPRESION		1				
14	6X4–44188–00	WASHER ARANDELLA		2				
15	90386–08032	BUSH BUJE		1				
16	63D–42126–00	FRICTION, STEERING HANDLE GRIP FRICCION DE MANGO DIRECCION		1				
17	6X4–48154–00	KNOB, THROTTLE PERILLA DE ACELERADOR		1				
18	95380–06600	NUT, HEXAGON TUERCA		1				
19	91490–20010	PIN. COTTER CHAVETA		1				
20	6X4–44100–01	SHIFT LINK ASSY ESLABON DE SLECTOR COMPLETO		1				
21	6X4–42115–00	.SHAFT, STEERING HANDLE .EJE MANIJA DE DIRECCION		1				
22	6X4–44102–00	.SHIFT ASSIST ASSY. .SELECTOR DE ASISTIR		1				
23	6X4–47731–01	.GEAR, DRIVE .ENGRANAJE DE TRACCION		1				
24	6X4–44132–00	.BUSHING .BUJE		1				
25	6X4–14137–00	.CLIP .PRESILLA		1				
26	6X4–48261–00	.ARM, THROTTLE .BRAZO ACELERADOR		1				
27	6X4–82540–00	.NEUTRAL SWITCH ASSY .INTERRUPTOR NEUTRAL COMPL		1				

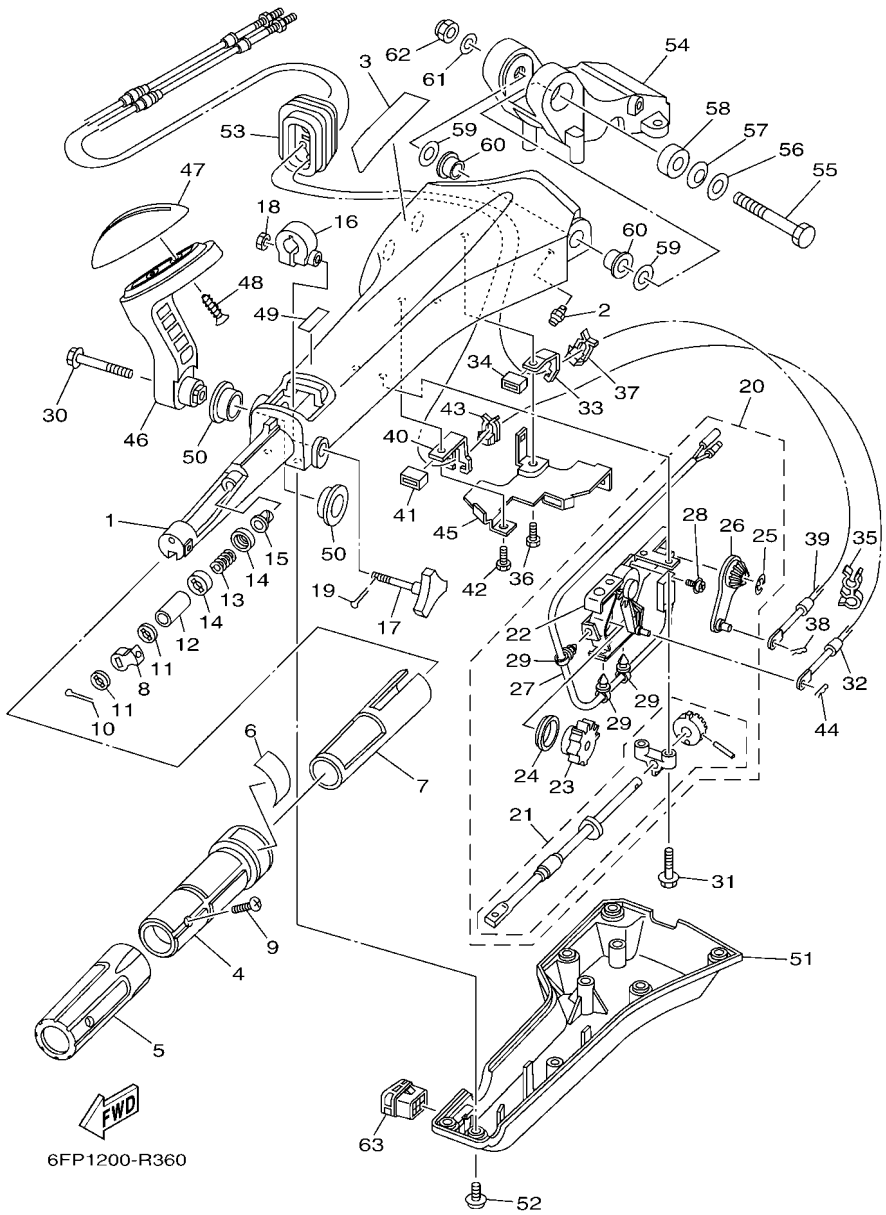

FIG. 23 STEERING 1 — DIRECCION 1

REF. NO.	PART NO. CODIGO Nº	DESCRIPTION DESCRIPCION	ET	EHT				REMARKS OBSERVACIONES
28	703–48129–00	.SCREW 3 .TORNILLO 3		2				
29	6X4–42821–00	.BAND, CLAMP .BRIDA DE CINTA		3				
30	97E95–08540	BOLT, HEXAGON W/W DEEP RECESS TORNILLO HEXAGONAL CON RONDONA		1				
31	97E95–06530	BOLT, HEXAGON W/W DEEP RECESS TORNILLO HEXAGONAL CON RONDONA		2				
32	6EK–48321–00	CABLE CABLE CONTROL REMOTO		1				
33	6X4–48538–00	CLAMP, CABLE 1 GRAMPA DE CABLE		1				
34	6X4–26367–01	PROTECTOR ACCESORIA		1				
35	90464–09M42	CLAMP BRIDA		1				
36	97D95–06014	BOLT, HEXAGON DEEP RECESS TORNILLO HEXAGONAL		1				
37	63D–48538–00	CLAMP, CABLE 1 GRAMPA DE CABLE		1				
38	90468–10005	CLIP PRESILLA		1				
39	6FP–26301–00	THROTTLE CABLE ASSY CABLE DE ACELERADOR COMPLETO		1				
40	6X4–48538–10	CLAMP, CABLE 1 GRAMPA DE CABLE		1				
41	6X4–26367–01	PROTECTOR ACCESORIA		1				
42	97D95–06014	BOLT, HEXAGON DEEP RECESS TORNILLO HEXAGONAL		1				
43	63D–48538–00	CLAMP, CABLE 1 GRAMPA DE CABLE		1				
44	90468–10005	CLIP PRESILLA		1				
45	6X4–42159–00	STAY SOPORTE		1				
46	6X4–44159–A0–8D	HANDLE, GEAR SHIFT MANIJA DE CAMBIO DE MARCHAS		1				
47	6X4–44173–00	LEVER, SHIFT CONTROL PALANCA CONTROL CAMBIOS		1				
48	97780–60920	SCREW, TAPPING TORNILLO DE CABEZA DE CONO ACH		2				
49	6X3–44191–00	INDICATOR, SHIFT INDICADOR DE CAMBIOS		1				
50	90386–26MA3	BUSH BUJE		2				
51	6X4–42131–11	COVER, HANDLE STEERING CUBIERTA MANIJA DIRRECCION		1				
52	97985–06216	SCREW, WITH WASHER TORNILLO, CON ARANDELA		6				
53	6X4–42725–01	GROMMET TAPON		1				
54	63D–42121–22–8D	BRACKET SOPORTE		1				

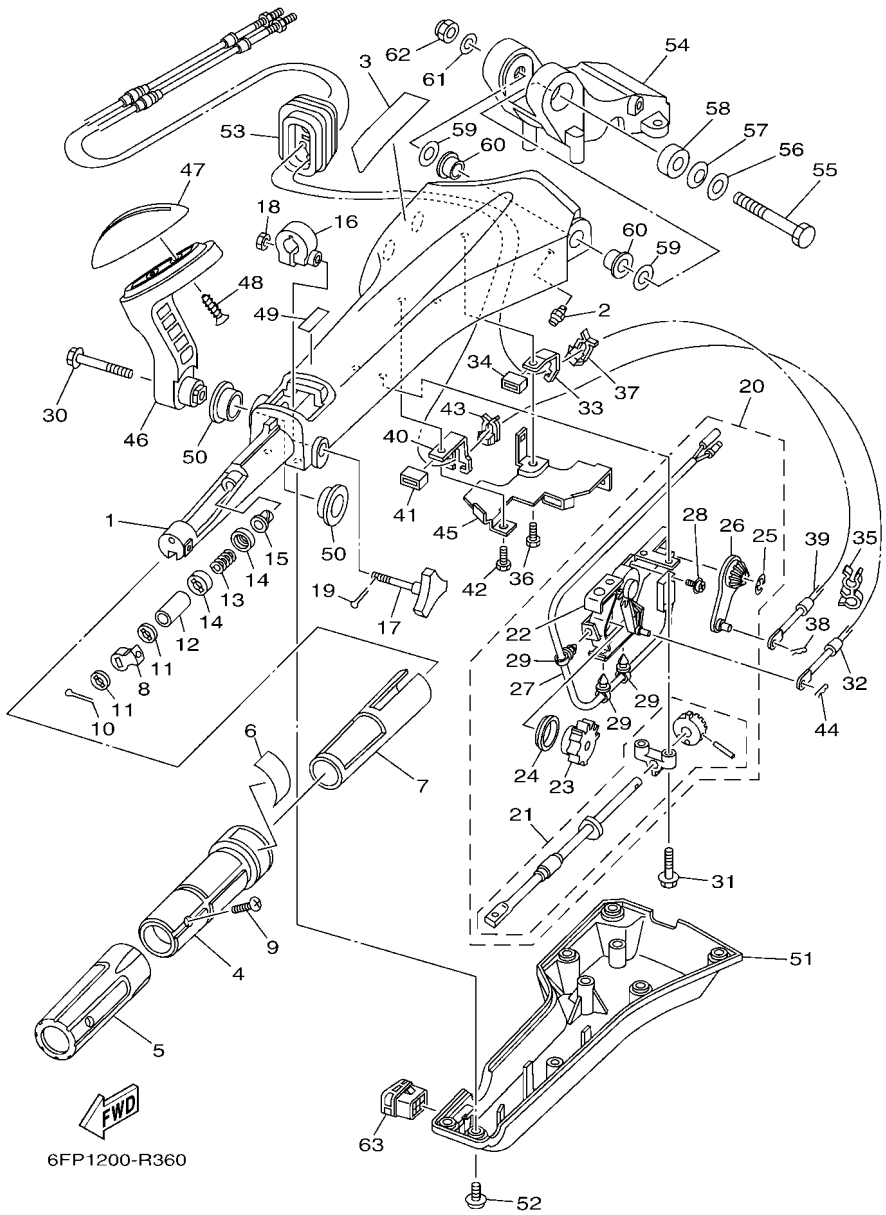

FIG. 23 STEERING 1 — DIRECCION 1

REF. NO.	PART NO. CODIGO Nº	DESCRIPTION DESCRIPCION	ET	EHT				REMARKS OBSERVACIONES
55	90101–12014	BOLT TORNILLO		1				
56	92990–12200	WASHER, PLAIN ARANDELA PLANA		1				
57	90206–12M22	WASHER, WAVE ARANDELA ONDULADA		1				
58	90387–12M02	COLLAR ESPACIADOR		1				
59	90201–12035	WASHER, PLATE ARANDELA PLANA		2				
60	90386–12003	BUSH BUJE		2				
61	92990–12600	WASHER, PLATE ARANDELA PLANA		1				
62	90185–12M12	NUT, SELF-LOCKING TUERCA AUTOBLOCANTE		1				
63	6X4–42728–10	CAP TAPA		1				

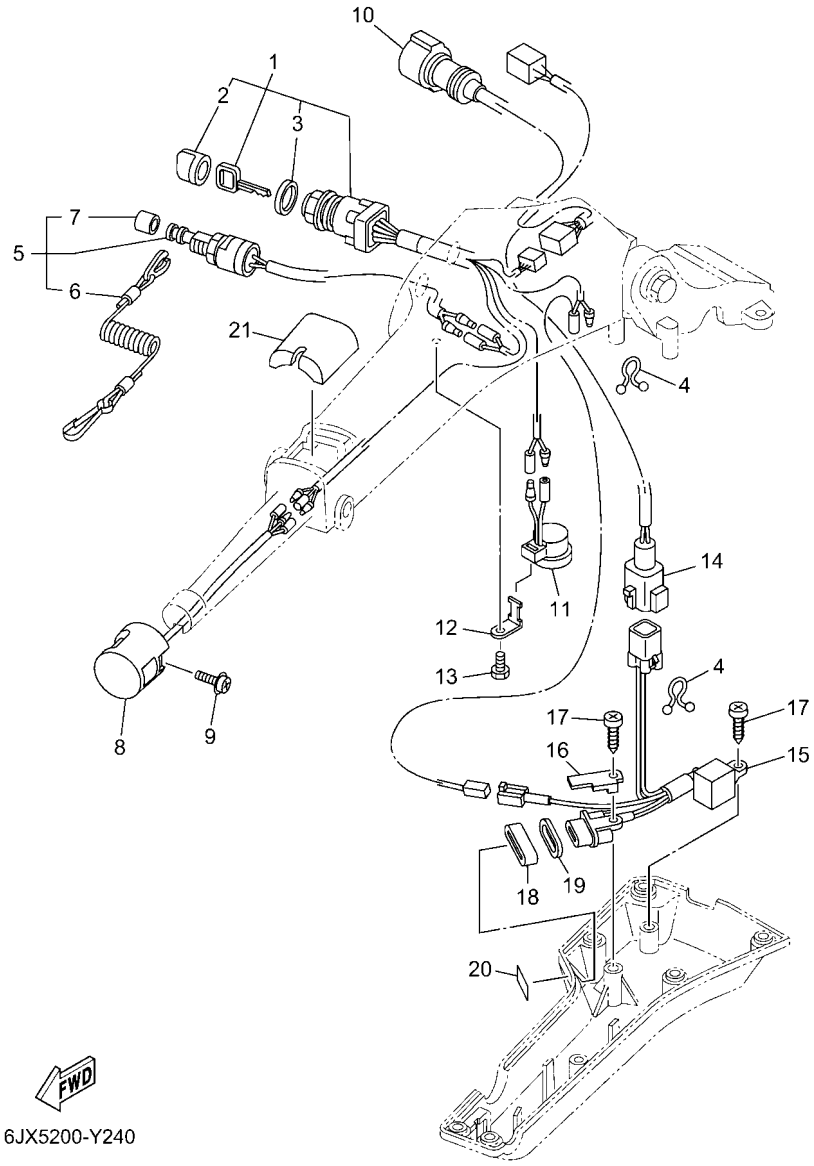

6JX5200-Y240

FIG. 24 STEERING 2 — DIRECCION 2

REF. NO.	PART NO. CODIGO Nº	DESCRIPTION DESCRIPCION	ET	EHT				REMARKS OBSERVACIONES
1	6X4–82510–11	MAIN SWITCH ASSY CONJUNTO DE LLAVE IGNICION		1				
2	676–82577–01	.CAP, KEY .TAPA		1				
3	703–82532–00	.CAP .TAPA		1				
4	90464–08M07	CLAMP BRIDA		2				
5	69W–82575–00	ENGINE STOP SWITCH ASSY INTERRUPTOR DE PARADA COMPL		1				
6	682–82556–00	.LANYARD, STOP SWITCH .CORDON DE INTERRUPTOR PARADA		1				
7	689–8257Y–00	.CAP .TAPA		1				
8	6X4–82563–01	TRIM & TILT SWITCH ASSY INTERRUPTOR DE INCLINACION		1				
9	97980–06216	SCREW, WITH WASHER TORNILLO, CON ARANDELA		1				
10	6X4–82586–11	EXT., WIRE HARNESS (L:950MM) EXT, CONJ. DE CABLES (L:950MM)		1				
11	6X4–83383–00	BUZZER ZUMBADOR		1				
12	6X4–83386–00	STAY, BUZZER TIRANTE DE ZUMBADOR		1				
13	97D95–06014	BOLT, HEXAGON DEEP RECESS TORNILLO HEXAGONAL		1				
14	6X4–83653–20	WIRE, LEAD (L:700MM) CABLE CONDUCTOR (L:700MM)		1				
15	6C5–84301–10	PILOT LIGHT ASSY 1 LUZ PILOTO COMPLETA 1		1				
16	6X4–44114–00	STOPPER RETEN		1				
17	97780–60620	SCREW, TAPPING TORNILLO DE CABEZA DE CONO ACH		2				
18	6X4–42727–01	GROMMET TAPON		1				
19	6FM–83589–00	GASKET EMPAQUE		1				
20	6X4–85415–00	MARK, SIGNAL LAMP MARCO DE FOCO DE SENAL		1				
21	6X4–81942–01	COVER CUBIERTA		1				

FIG. 25 STEERING 3 — DIRECCION 3

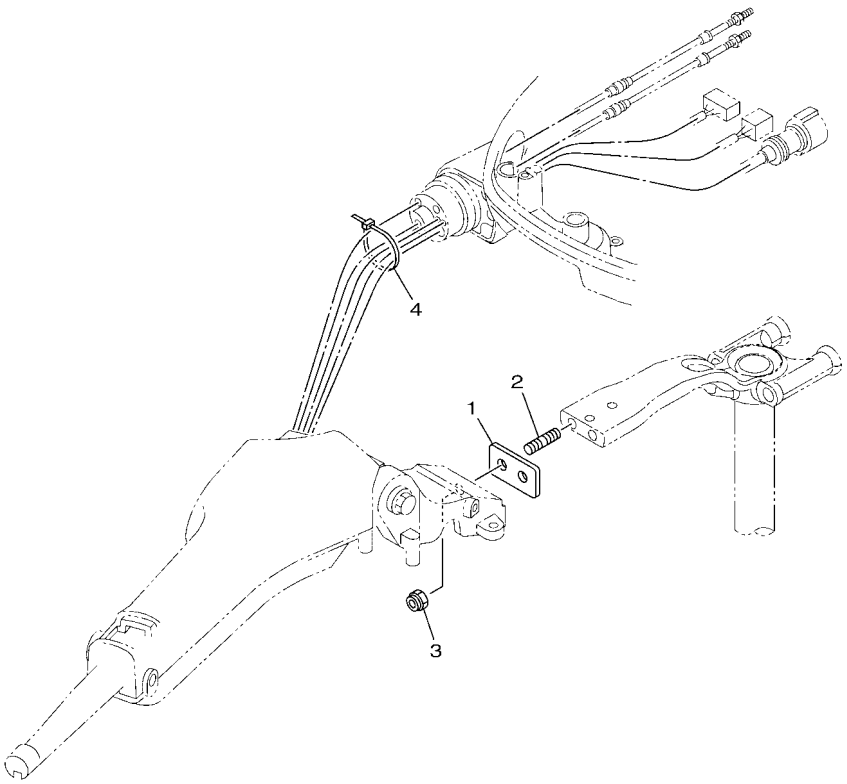

6EK2010-P260

REF. NO.	PART NO. CODIGO Nº	DESCRIPTION DESCRIPCION	ET	EHT				REMARKS OBSERVACIONES
1	6EK–42121–00	BRACKET SOPORTE		1				
2	90116–10063	BOLT, STUD ESPARRAGO		2				
3	90185–10027	NUT, SELF-LOCKING TUERCA AUTOBLOCANTE		2				
4	90465–13M24	CLAMP BRIDA		1				

FIG. 26 STEERING FRICTION — FRICCION DE DIRECCION

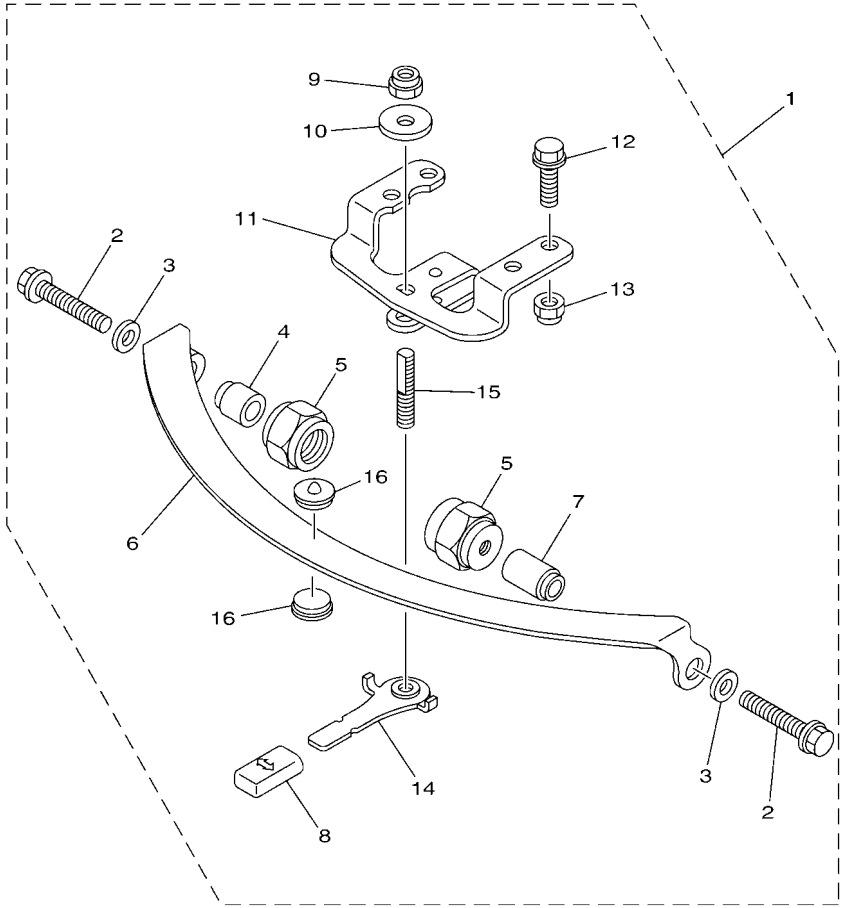

6FP1200-R390

REF. NO.	PART NO. CODIGO Nº	DESCRIPTION DESCRIPCION	ET	EHT				REMARKS OBSERVACIONES
1	67G–42508–12	STEERING FRICTION ASSY DIRECCION FRICCION COMP.		1				
2	90119–08193	.BOLT, WITH WASHER .TORNILLO CON ARANDELA		2				
3	90201–08M01	.WASHER, PLATE .ARANDELA PLANA		2				
4	67G–42541–00	.PIPE 1 .TUBO 1		1				
5	67G–42546–00	.NUT .TUERCA		2				
6	63D–42527–00	.PLATE, FRICTION .PLACA DE FRICCION		1				
7	67G–42541–10	.PIPE 1 .TUBO 1		1				
8	682–43318–01	.COVER .CUBIERTA		1				
9	90185–10M14	.NUT, SELF-LOCKING .TUERCA AUTOBLOCANTE		1				
10	90201–10M76	.WASHER, PLATE .ARANDELA PLANA		1				
11	6X4–42526–00	.PLATE, FRICTION .PLACA DE FRICCION		1				
12	97E95–08525	.BOLT, HEXAGON W/W DEEP RECESS .TORNILLO HEXAGONAL CON RONDONA		2				
13	90185–08057	.NUT, SELF-LOCKING .TUERCA AUTOBLOCANTE		2				
14	67G–42561–00	.KNOB, STEERING LOCK .PERILLA		1				
15	67G–42562–00	.SHAFT, STEERING LOCK .EJE,CERRADURA DE DIRECCION		1				
16	63D–42528–00	.PLATE, FRICTION .PIEZA DE FRICCION		2				

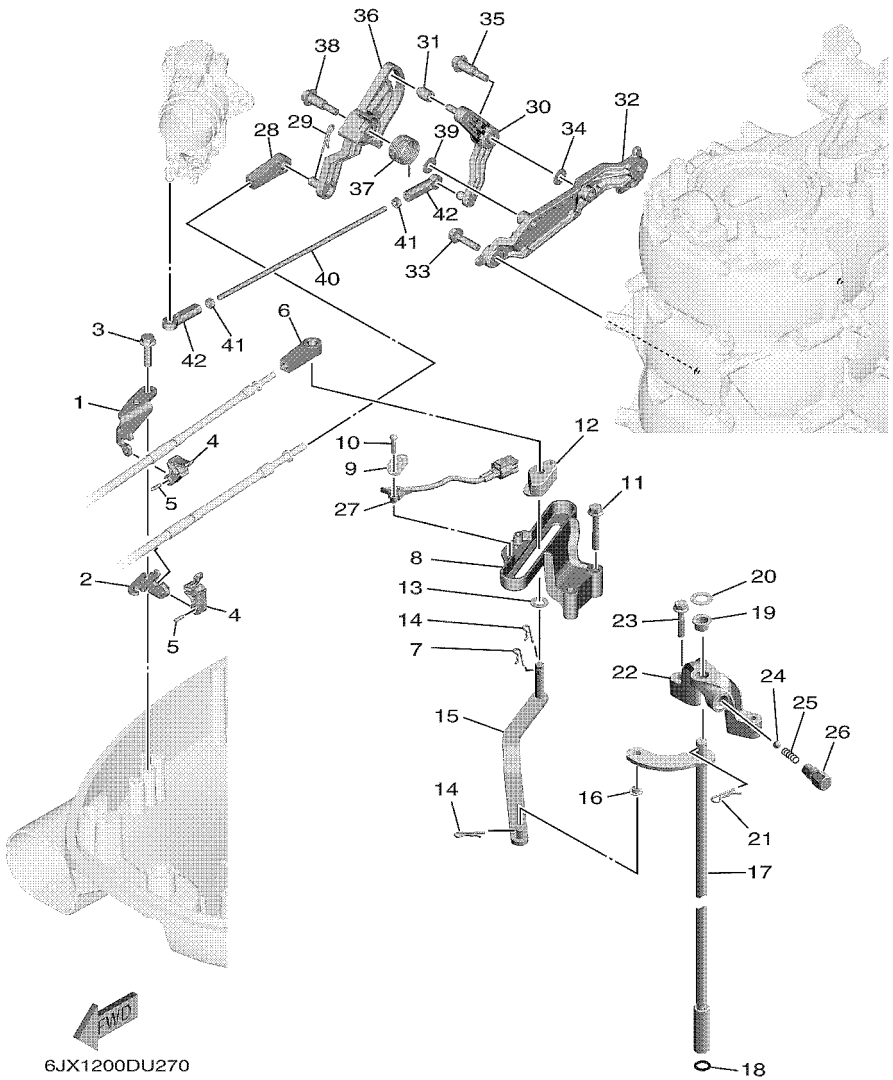

FIG. 27 CONTROL

CONTROL

REF. NO.	PART NO. CODIGO Nº	DESCRIPTION DESCRIPCION	ET	EHT				REMARKS OBSERVACIONES
1	6EK–48531–01	BRACKET, REMOTE CONTROL 1 SOPORTE DE CONTROL REMOTO	1	1				
2	6FP–48532–00	BRACKET, REMOTE CONTROL 2 SOPORTE DE CONTROL REMOTO	1	1				
3	90109–06M81	BOLT PERNO	2	2				
4	6EK–48538–00	CLAMP, CABLE 1 GRAMPA DE CABLE	2	2				
5	91690–30010	PIN, SPRING PASADOR DE RESORTE	2	2				
6	6E5–48344–00	CABLE END, REMOTE CONTROL BASE CONTROL	1	1				
7	90468–18008	CLIP PRESILLA	1	1				
8	6EK–44117–01	BRACKET SOPORTE	1	1				
9	61A–82588–01	PLATE PLACA	1	1				
10	97985–04116	SCREW, WITH WASHER TORNILLO, CON ARANDELA	2	2				
11	95D75–06040	BOLT, FLANGE DEEP RECESS CERROJO, REBORDE HUECO PROFUND	2	2				
12	63P–44122–00	BUSHING, SHIFT ROD LEVER BUJE PALANCA VARILLA DE CAMBIO	1	1				
13	90202–08M20	WASHER, PLATE ARANDELA DE PLANA	1	1				
14	90468–18008	CLIP PRESILLA	2	2				
15	6EK–44121–00	LEVER, SHIFT ROD PALANCA VARILLA CAMBIOS	1	1				
16	90386–06M12	BUSH BUJE	1	1				
17	6EK–44120–01	HANDLE GEAR SHIFT ASSY MANIJA DE CAMBIO COMPL	1	1				L(20.3") L(20.3")
	6EK–44120–11	HANDLE GEAR SHIFT ASSY MANIJA DE CAMBIO COMPL	1	1				X(25.3") X(25.3")
18	93210–09165	O-RING ANILLO O	1	1				
19	90386–10001	BUSH BUJE	1	1				
20	90201–11008	WASHER, PLATE ARANDELA PLANA	1	1				
21	90468–180A0	CLIP PRESILLA	1	1				
22	6EK–44118–00	BRACKET SOPORTE	1	1				
23	95D95–06030	BOLT, FLANGE DEEP RECESS CERROJO, REBORDE HUECO PROFUND	2	2				
24	93501–04M02	BALL BOLA	1	1				
25	90501–12082	SPRING, COMPRESSION RESORTE DE COMPRESION	1	1				
26	648–42715–00	BUSHING 2 BUJE 2	1	1				

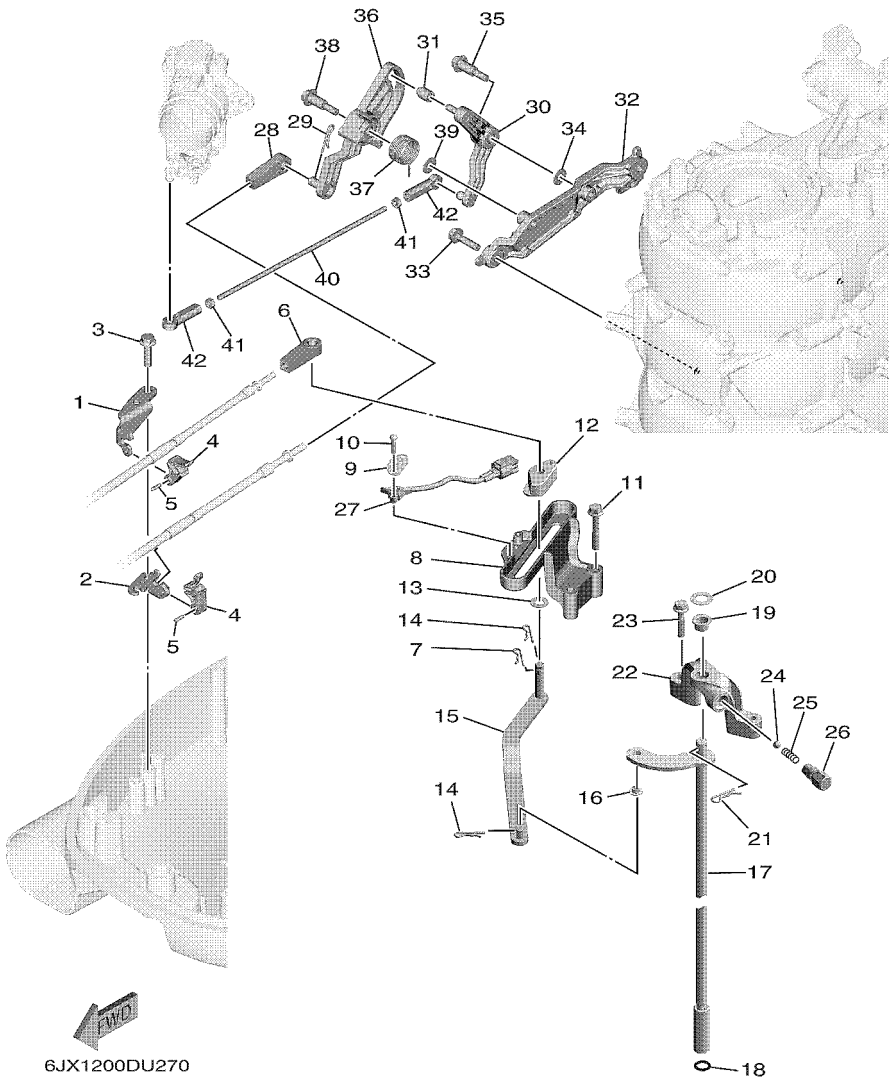

FIG. 27 CONTROL

CONTROL

REF. NO.	PART NO. CODIGO Nº	DESCRIPTION DESCRIPCION	ET	EHT				REMARKS OBSERVACIONES
27	60V–8259F–01	SWITCH ASSY INTERRUPTOR	1	1				
28	6E5–48344–00	CABLE END, REMOTE CONTROL BASE CONTROL	1	1				
29	90468–18008	CLIP PRESILLA	1	1				
30	6FP–42154–00	LEVER, THROTTLE CONTROL PALANCA CONTROL ACELERADOR	1	1				
31	68V–42171–00	BUSHING BUJE	1	1				
32	6FP–41662–00	BRACKET 2 SOPORTE 2	1	1				
33	95D95–06025	BOLT, FLANGE DEEP RECESS CERROJO, REBORDE HUECO PROFUND	2	2				
34	90201–06M05	WASHER, PLATE ARANDELA PLANA	1	1				
35	90109–06288	BOLT PERNO	1	1				
36	6FP–41213–00	CAM, ACCEL. LEVA ACELERADOR	1	1				
37	6EK–44135–00	SPRING RESORTE	1	1				
38	90109–06288	BOLT PERNO	1	1				
39	90201–06M05	WASHER, PLATE ARANDELA PLANA	1	1				
40	6FP–41211–00	LINK, ACCEL. ESLABON, ACELERADOR	1	1				
41	95380–05600	NUT TUERCA	2	2				
42	682–41237–00	JOINT, LINK CONECTOR	2	2				

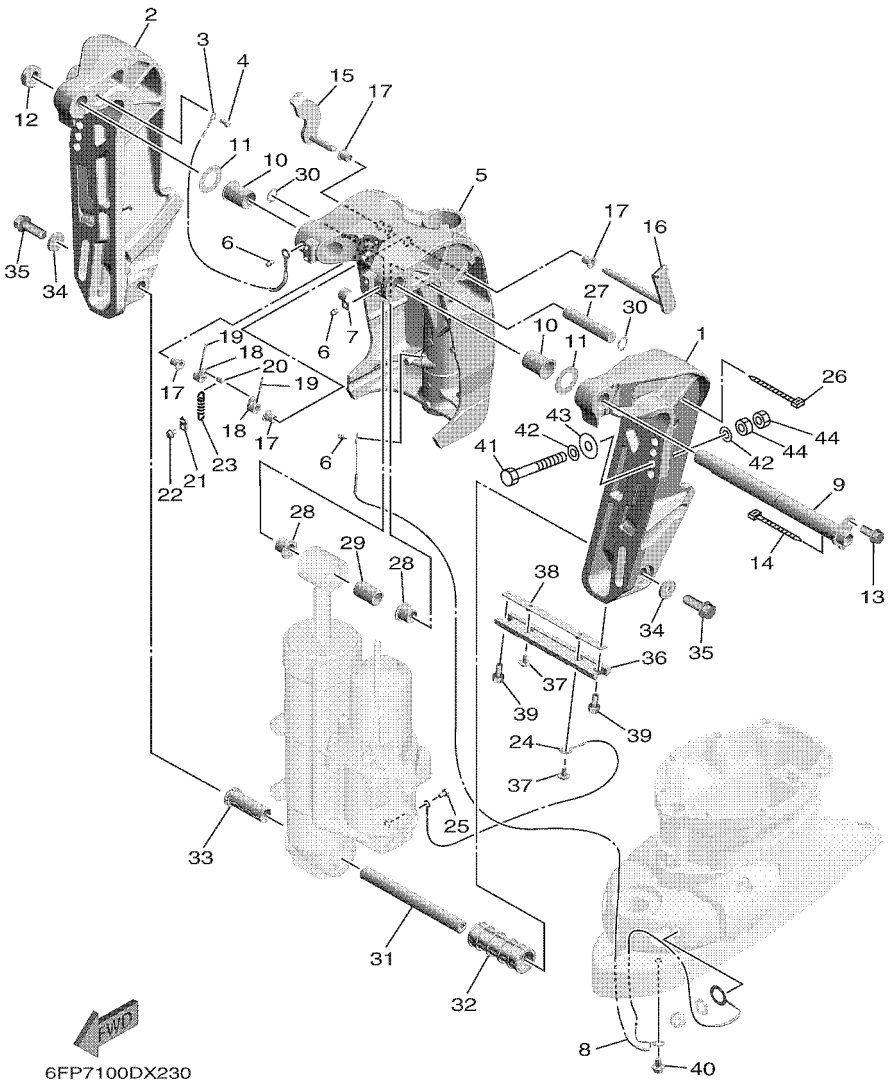

FIG. 28 BRACKET 1 — SOPORTE 1

REF. NO.	PART NO. CODIGO Nº	DESCRIPTION DESCRIPCION	ET	EHT				REMARKS OBSERVACIONES
1	6EK–43111–00–8D	BRACKET, CLAMP 1 SOPORTE DE LA ABRAZADERA 1	1	1				
2	6EK–43112–00–8D	BRACKET, CLAMP 2 SOPORTE DE LA ABRAZADERA 2	1	1				
3	6E5–82148–00	WIRE, LEAD 4 CABLE CONDUCTOR 4	1	1				
4	97885–06008	SCREW, PAN HEAD TORNILLO A MUESCA	1	1				
5	6EK–43311–00–8D	BRACKET, SWIVEL 1 SOPORTE GIRATORIO 1	1	1				L(20.3") L(20.3")
	6EK–43311–10–8D	BRACKET, SWIVEL 1 SOPORTE GIRATORIO 1	1	1				X(25.3") X(25.3")
6	93700–06002	NIPPLE, GREASE BOQUILLA DE ENGRASAR	3	3				
7	90465–08M63	CLAMP BRIDA	1	1				
8	66K–82149–00	WIRE, LEAD 3 CABLE CONDUCTOR 3	1	1				L(20.3") L(20.3")
	68V–82149–30	WIRE, LEAD 3 CABLE CONDUCTOR 3	1	1				X(25.3") X(25.3")
9	64E–43131–30	BOLT, CLAMP BRACKET TORNILLO DE ABRAZADERA DEL SOP	1	1				
10	90386–25M31	BUSH BUJE	2	2				
11	90201–26M59	WASHER, PLATE ARANDELA PLANA	2	2				
12	90185–22M11	NUT, SELF-LOCKING TUERCA AUTOBLOCANTE	1	1				
13	97E95–08520	BOLT, HEXAGON W/W DEEP RECESS TORNILLO HEXAGONAL CON RONDONA	1	1				
14	90465–11M10	CLAMP BRIDA	1	1				
15	6EK–43181–00	LEVER, TILT STOP 1 PALANCA TOPE INCLINACION 1	1	1				
16	6EK–43185–00	LEVER, TILT STOP 2 PALANCA TOPE INCLINACION 2	1	1				
17	90386–10M16	BUSH BUJE	4	4				
18	6G5–43148–00	COLLAR, DISTANCE COLLAR	2	2				
19	91690–30020	PIN, SPRING PASADOR DE RESORTE	2	2				
20	90249–06M19	PIN PASADOR	1	1				
21	66T–43144–00	HOOK, SPRING GANCHO	1	1				
22	97E95–06512	BOLT, HEXAGON W/W DEEP RECESS TORNILLO HEXAGONAL CON RONDONA	1	1				
23	90506–14M24	SPRING, TENSION RESORTE DE TENSION	1	1				
24	6D8–82148–00	WIRE, LEAD 4 CABLE CONDUCTOR 4	1	1				
25	97E95–06510	BOLT, HEXAGON W/W DEEP RECESS TORNILLO HEXAGONAL CON RONDONA	1	1				

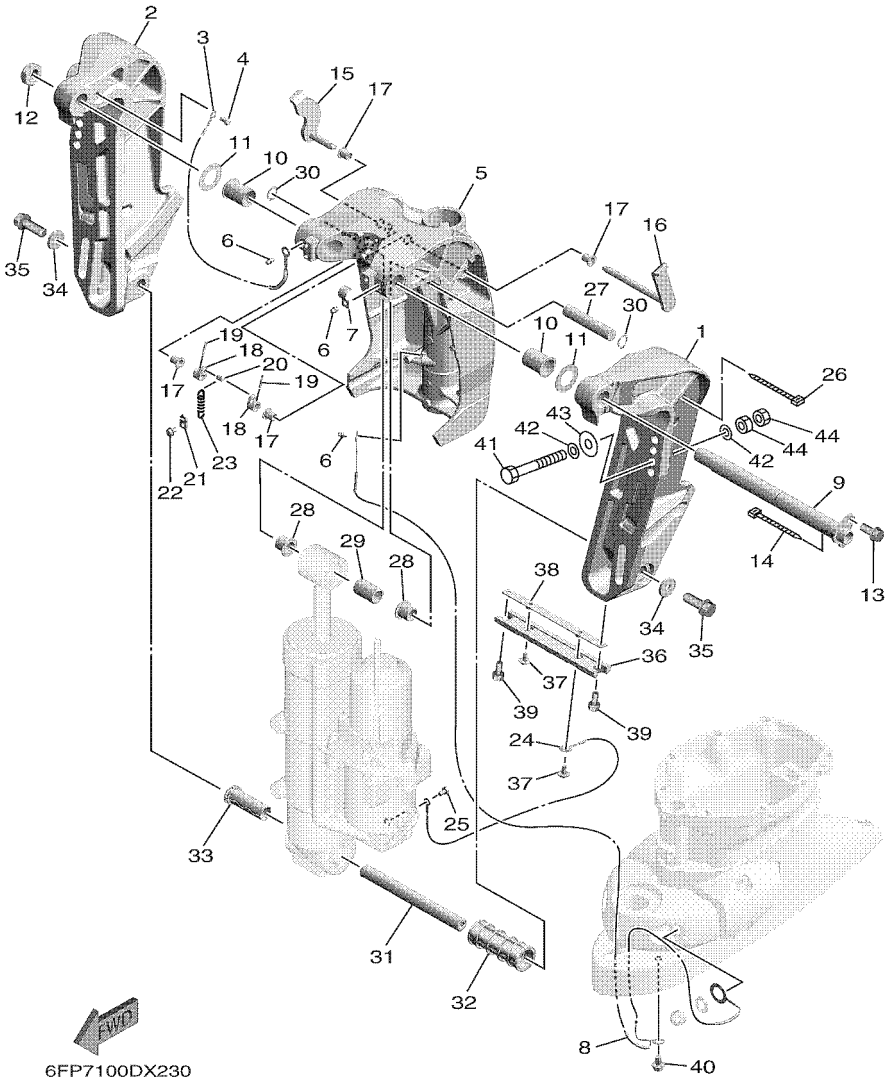

FIG. 28 BRACKET 1 — SOPORTE 1

REF. NO.	PART NO. CODIGO Nº	DESCRIPTION DESCRIPCION	ET	EHT				REMARKS OBSERVACIONES
26	90465–13M18	CLAMP BRIDA	1	1				
27	6EK–43126–00	PIN, UPPER SHOCK MOUNT PASADOR DE AMORTIGUADOR SUPERI	1	1				
28	90386–18M35	BUSH BUJE	2	2				
29	90386–18001	BUSH BUJE	1	1				
30	93410–18M05	CIRCLIP SEGURO	2	2				
31	6EK–43818–00	PIN, LOWER SHOCK MOUNT PASADOR AMORTIGUADOR INFERIOR	1	1				
32	6H1–43834–10	PIPE TUBO 2	1	1				
33	90383–20001	BUSH, FORMED BUJE	1	1				
34	90201–10060	WASHER, PLATE ARANDELA PLANA	2	2				
35	90119–10054	BOLT, WITH WASHER TORNILLO CON ARANDELA	2	2				
36	6H1–45251–03	ANODE CATODE	1	1				
37	90119–06276	BOLT, WITH WASHER TORNILLO CON ARANDELA	2	2				
38	6EK–44536–00	PLATE 2 PLACA 2	1	1				
39	97E95–06616	BOLT, HEXAGON W/W DEEP RECESS TORNILLO HEXAGONAL CON RONDONA	2	2				
40	95D95–06010	BOLT, FLANGE DEEP RECESS CERROJO, REBORDE HUECO PROFUND	1	1				
41	90101–12064	BOLT (L:115MM) TORNILLO (L:115MM)	4	4				F75F F75F
	90101–12065	BOLT (L:130MM) TORNILLO (L:130MM)	4	4				F100G F100G
42	90201–13M01	WASHER, PLATE ARANDELA PLANA	8	8				
43	90201–12426	WASHER, PLATE ARANDELA PLANA	4	4				
44	95380–12600	NUT TUERCA	8	8				

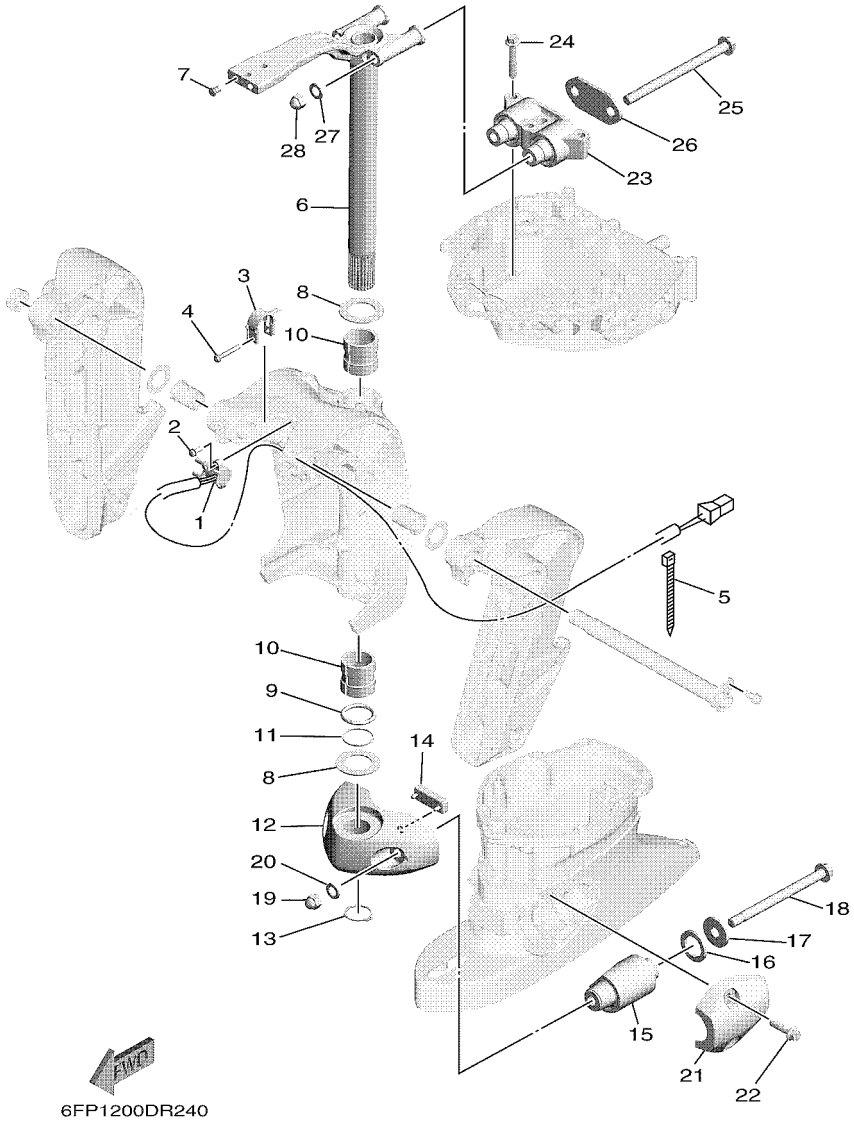

FIG. 29 BRACKET 2 — SOPORTE 2

REF. NO.	PART NO. CODIGO Nº	DESCRIPTION DESCRIPCION	ET	EHT				REMARKS OBSERVACIONES
1	67H–83672–02	TRIM SENDER TRANSMISOR DE INCLINADOR	1	1				
2	97985–06216	SCREW, WITH WASHER TORNILLO, CON ARANDELA	2	2				
3	64E–43139–11	CAM, TRIM SENDER LEVA TRANSMISOR DE INCLINDOR	1	1				
4	90159–05059	SCREW, WITH WASHER TORNILLO CON VALONA	1	1				
5	90465–11M10	CLAMP BRIDA	2	2				
6	6EK–42510–00–8D	STEERING BRACKET ASSY SOPORTE DIRECCION COMPL.	1	1				L(20.3") L(20.3")
	6EK–42510–10–8D	STEERING BRACKET ASSY SOPORTE DIRECCION COMPL.	1	1				X(25.3") X(25.3")
7	90338–08174	PLUG TAPON	2	2				
8	90201–38M60	WASHER, PLATE ARANDELA PLANA	2	2				
9	93210–37MH7	O-RING ANILLO O	1	1				
10	90386–38M32	BUSH BUJE	2	2				
11	90202–40M47	WASHER, PLATE ARANDELA DE PLANA	1	1				
12	6EK–44551–00–8D	HOUSING, LOWER MOUNT RUBBER 1 CAJA AMORTIGUADOR INFERIOR HU	1	1				
13	93410–36102	CIRCLIP SEGURO	1	1				
14	61A–44575–01	DAMPER, LOWER MOUNT RUBBER AMORTIGUADOR INFERIOR	1	1				
15	63P–44555–00	MOUNT DAMPER, LOWER SIDE AMORTIGUADOR DE HULE LADO INFE	2	2				
16	90202–32M19	WASHER, PLATE ARANDELA DE PLANA	2	2				
17	90201–16M55	WASHER, PLATE ARANDELA PLANA	2	2				
18	90105–14013	BOLT, FLANGE TORNILLO	2	2				
19	90176–14002	NUT, CAP TUERCA DE TAPA	2	2				
20	92995–14600	WASHER ARANDELA	2	2				
21	6EK–44553–00–8D	COVER, LOWER MOUNT CUBIERTA,AMORTIGUADOR INFERIOR	2	2				
22	90119–10058	BOLT, WITH WASHER TORNILLO CON ARANDELA	4	4				
23	6FP–44514–00	MOUNT DAMPER, UPPER SIDE AMORTIGUADOR LADO SUPERIOR	1	1				
24	95D75–10060	BOLT, FLANGE DEEP RECESS CERROJO, REBORDE HUECO PROFUND	3	3				
25	90105–14007	BOLT, FLANGE TORNILLO	2	2				
26	6EK–44526–00	PLATE PLACA 1	1	1				

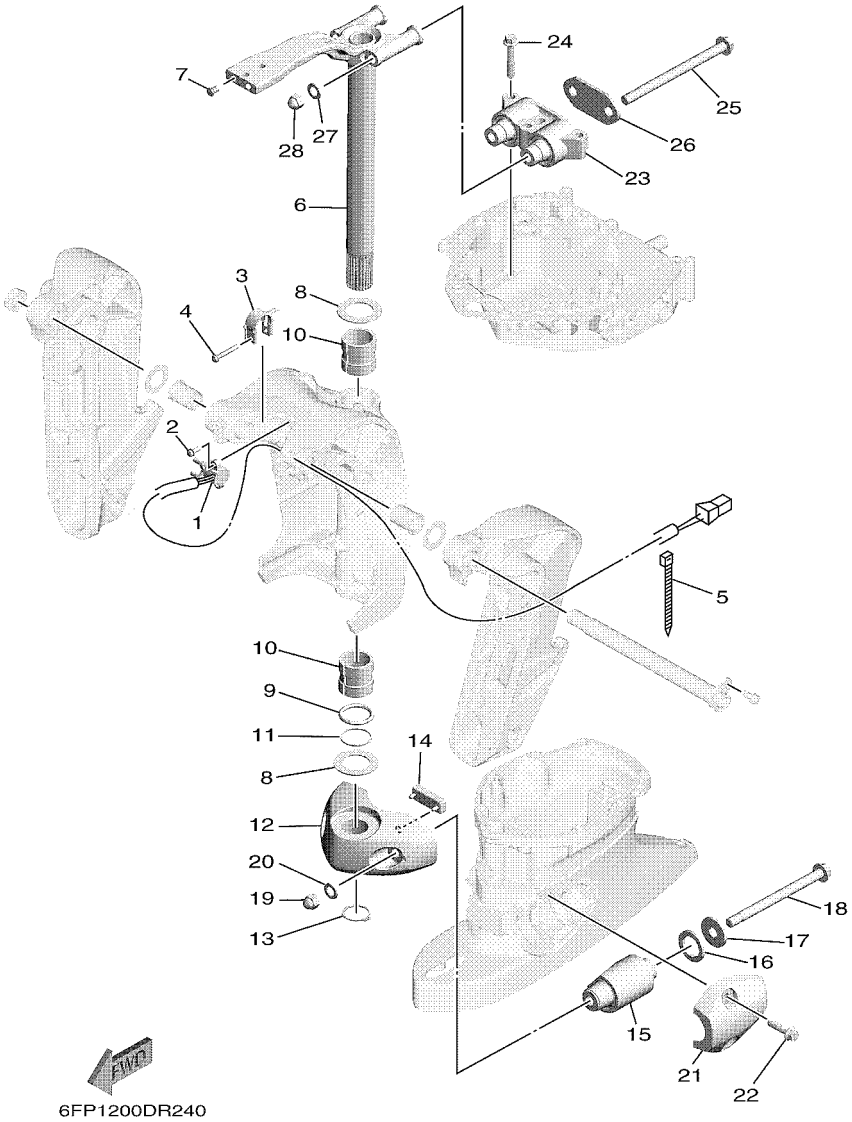

FIG. 29 BRACKET 2 — SOPORTE 2

REF. NO.	PART NO. CODIGO Nº	DESCRIPTION DESCRIPCION	ET	EHT				REMARKS OBSERVACIONES
27	92995–14600	WASHER ARANDELA	2	2				
28	90176–14002	NUT, CAP TUERCA DE TAPA	2	2				

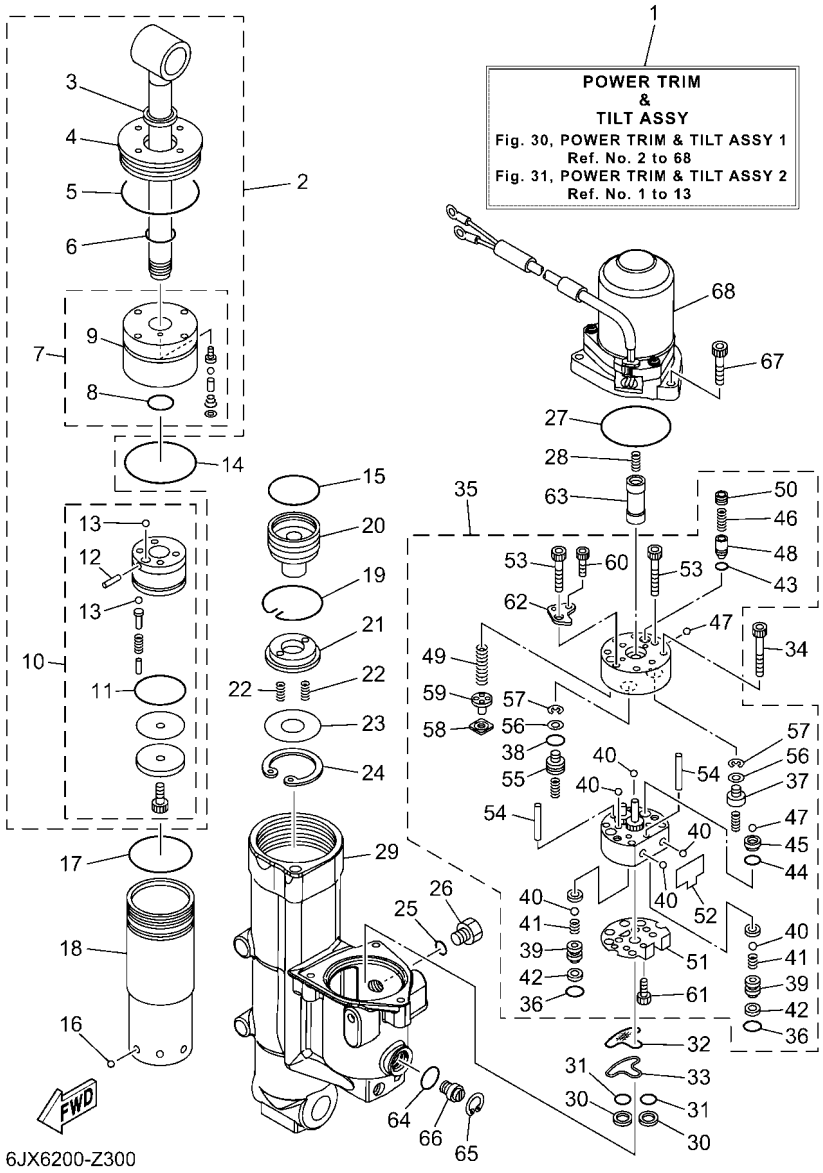

FIG. 30 POWER TRIM & TILT ASSY 1 — COMPONER Y PODER VARILLA 1

REF. NO.	PART NO. CODIGO Nº	DESCRIPTION DESCRIPCION	ET	EHT				REMARKS OBSERVACIONES
1	6FP–43800–02	POWER TRIM & TILT ASSY ELEVADOR HIDRAULICO COMPL.	1	1				
2	6EK–43810–00	TILT PISTON SUB ASSY ELEVADOR SUB-PISTON COMPL.	1	1				
3	6H1–43812–00	.SEAL, DUST .SELLO DE POLVO	1	1				
4	6EK–43821–00	.SCREW, TRIM CYLINDER END .TORNILLO CILINDRO EXTREMO	1	1				
5	6EK–43861–00	.O-RING .ANILLO EN O 1	1	1				
6	6D8–43861–00	.O-RING .ANILLO EN O 1	1	1				
7	6EK–4380R–00	.CYLINDER END SUB ASSY .CILINDRO EXTREMO SUB-COMPLET	1	1				
8	6D8–43861–00	..O-RING ..ANILLO EN O 1	1	1				
9	6EK–43811–00	..SCREW, CYLINDER END ..TORNILLO CILINDRO EXTREMO	1	1				
10	6EK–4380P–00	.PISTON SUB ASSY .SUB-PISTON COMPL	1	1				
11	6H1–43862–00	..O-RING ..ANILLO EN O 2	1	1				
12	91609–16012	..PIN, SPRING ..PASADOR DE RESORTE	1	1				
13	93505–32038	..BALL ..BOLA	5	5				
14	67F–43865–00	O-RING ANILLO EN O 5	1	1				
15	6H1–43862–00	O-RING ANILLO EN O 2	1	1				
16	93503–16003	BALL ESFERA	6	6				
17	7BB–G3861–00	O-RING ANILLO EN O 1	1	1				
18	6EK–22471–01	CYLINDER, SHOCK ABSORBER CILINDRO DE AMORTIGUADOR	1	1				
19	6EK–43875–00	RING, SNAP ANILLO	1	1				
20	6EK–4381B–00	FREE PISTON SUB ASSY SUB-PISTON COMPL	1	1				
21	6EK–43899–00	PLATE STOPPER PLACA	1	1				
22	62X–4384H–00	SPRING RESORTE	2	2				
23	6EK–22434–00	PLATE, VALVE 1 PLATO DE VALVULA 1	1	1				
24	99009–47500	CIRCLIP PRESILLA REDONDA	1	1				
25	93210–09165	O-RING ANILLO O	1	1				
26	6EK–43829–00	PLUG, RESERVOIR TAPON DEPOSITO	1	1				
27	93210–68N50	O-RING ANILLO O	1	1				

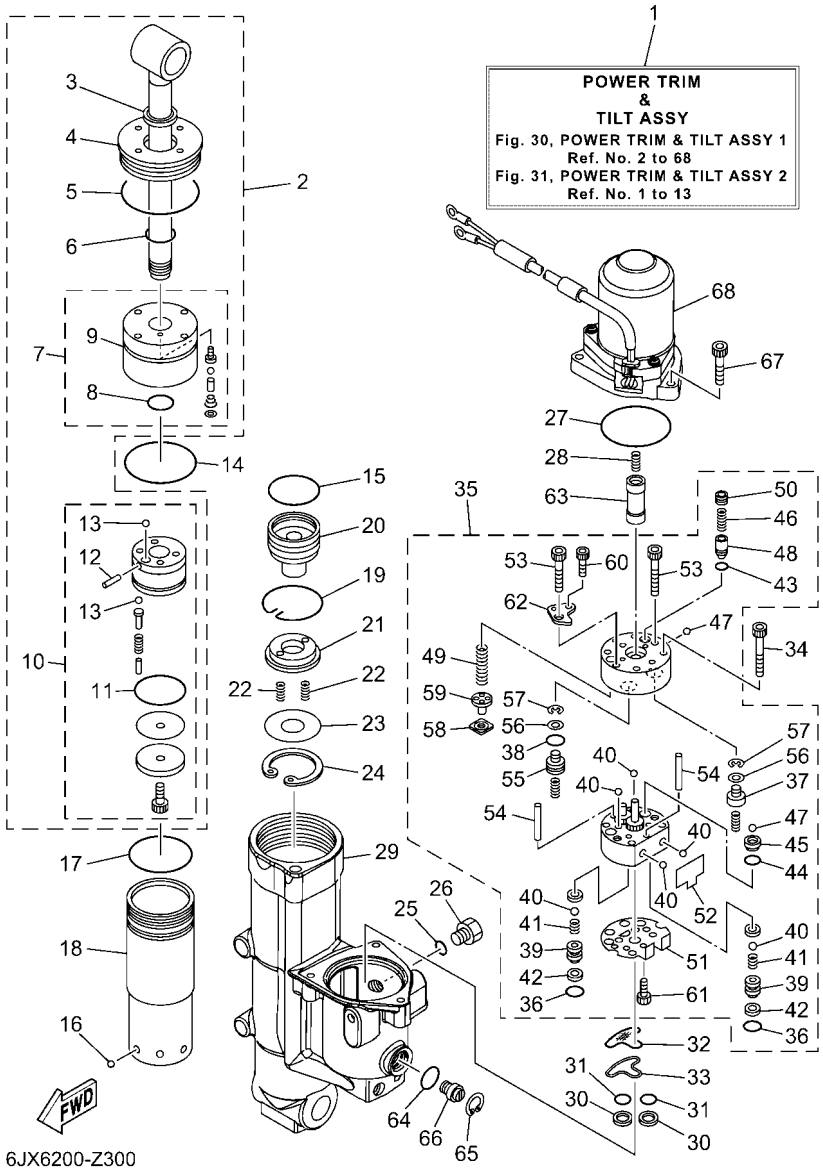

FIG. 30 POWER TRIM & TILT ASSY 1 — COMPONER Y PODER VARILLA 1

REF. NO.	PART NO. CODIGO Nº	DESCRIPTION DESCRIPCION	ET	EHT				REMARKS OBSERVACIONES
28	62X–4384H–00	SPRING RESORTE	1	1				
29	6FP–4380K–02	CYLINDER, TILT SUB ASSY CILINDRO, INCLINACION	1	1				
30	6C6–43817–00	FILTER 2 FIELTRO 2	2	2				
31	69J–4389J–00	O-RING ANILLO O	2	2				
32	6C5–43816–00	FILTER 1 FIELTRO 1	1	1				
33	6C5–4380G–00	PLATE PLACA	1	1				
34	91318–05045	BOLT TORNILLO	4	4				
35	6FP–43830–00	GEAR PUMP ASSY ENGRANAJE BOMBA COMPL.	1	1				
36	69J–4389J–00	.O-RING .ANILLO O	2	2				
37	6D8–4384M–00	.PISTON, SHUTTLE 2 .PISTON 2	1	1				
38	6H1–43883–00	.O-RING .ANILLO EN O 10	1	1				
39	6EK–4382E–00	.ADAPTOR 2 .ADAPTADOR 2	2	2				
40	93505–32038	.BALL .BOLA	6	6				
41	6C6–43853–00	.SPRING, MAIN VALVE .RESORTE	2	2				
42	6C6–4387G–00	.WASHER .ARANDELA	2	2				
43	93210–04N51	.O-RING .ANILLO O	1	1				
44	93210–064A5	.O-RING .ANILLO O	1	1				
45	6D8–43851–00	.SEAT, RELIEF VALVE .ASIENTO VALVULA DE DESCARGA	1	1				
46	6C5–43855–10	.SPRING, UP RELIEF .RESORTE SEGURIDAD SUPERIOR	1	1				
47	93501–08001	.BALL .BOLA	2	2				
48	6D8–43844–00	.PIN, VALVE SUPPORT .PASADOR VALVULA SOPORTE	1	1				
49	6EK–43856–00	.SPRING, DOWN RELIEF .RESORTE SEGURIDAD	1	1				
50	6D8–43843–00	.SCREW, VALVE LOCK .TORNILLO	1	1				
51	6C5–43895–00	.SEAT, RELIEF VALVE .ASIENTO	1	1				
52	6C5–43854–00	.SPRING, MANUAL RELEASE .RESORTE DESCOPLO MANUAL	1	1				
53	91318–05030	.BOLT .TORNILLO	2	2				
54	93604–26256	.PIN, DOWEL .PASADOR DE CLAVIJA	2	2				

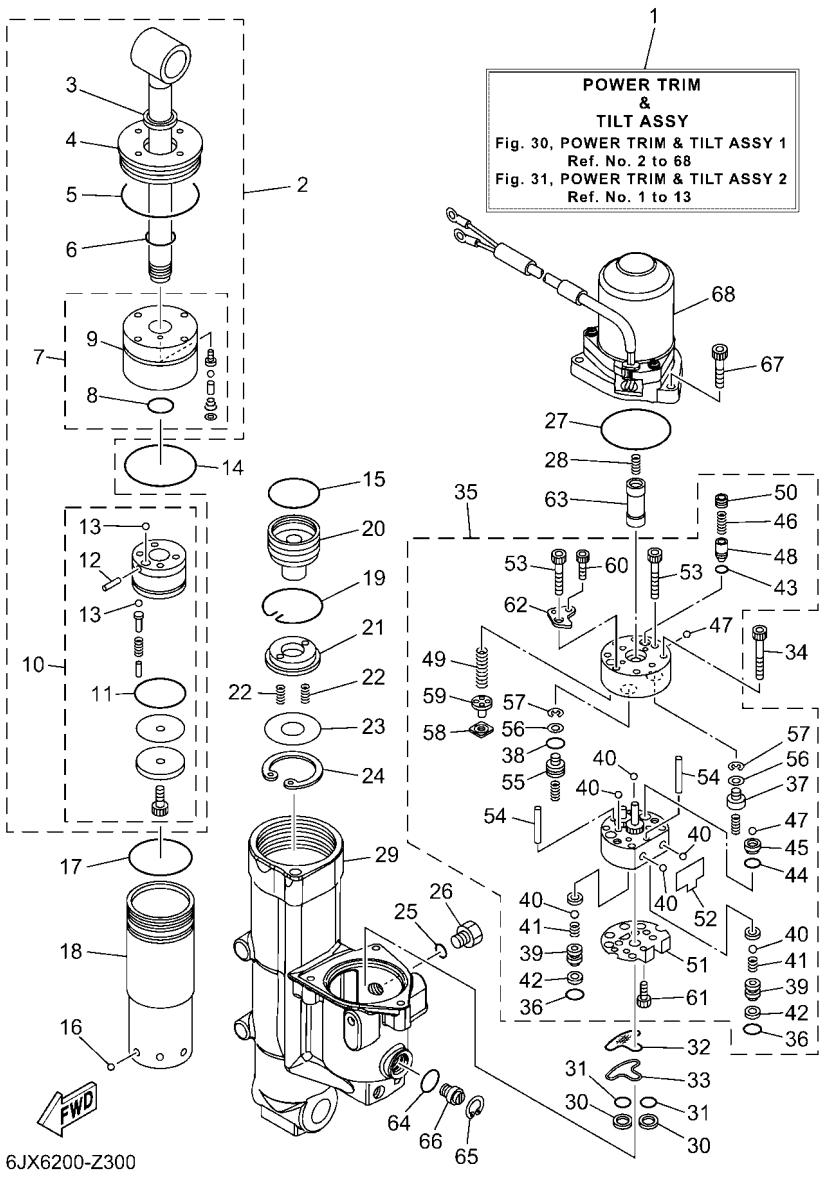

FIG. 30 POWER TRIM & TILT ASSY 1 — COMPONER Y PODER VARILLA 1

REF. NO.	PART NO. CODIGO Nº	DESCRIPTION DESCRIPCION	ET	EHT				REMARKS OBSERVACIONES
55	6D8–43841–00	.PISTON, SHUTTLE .PISTON	1	1				
56	69A–4384F–00	.SEAL, MAIN VALVE .ASIENTO	2	2				
57	99002–03600	.CIRCLIP .PRESILLA REDONDA	2	2				
58	6H1–4384G–11	.SEAL, RELIEF VALVE .ASIENTO	1	1				
59	6H1–43844–10	.PIN, VALVE SUPPORT .PASADOR VALVULA SOPORTE	1	1				
60	91318–03025	.BOLT .TORNILLO	2	2				
61	91318–03005	.BOLT .TORNILLO	1	1				
62	6D8–4382L–00	.CAP, RELIEF VALVE .TAPA	1	1				
63	6EK–43831–00	CONNECTOR, SHAFT CONEXION EJE	1	1				
64	6D8–43863–00	O-RING ANILLO EN O 3	1	1				
65	6H1–43875–00	RING, SNAP ANILLO	1	1				
66	6EK–43845–00	SCREW, MANUAL RELEASE TORNILLO DESCOPLO MANUAL	1	1				
67	91380–06025	BOLT PERNO	3	3				
68	6EK–43880–14	MOTOR ASSY MOTOR COMPL.	1	1				REFER TO FIG.31 REFER TO FIG.31

FIG. 31 POWER TRIM & TILT ASSY 2 — COMPONER Y PODER VARILLA 2

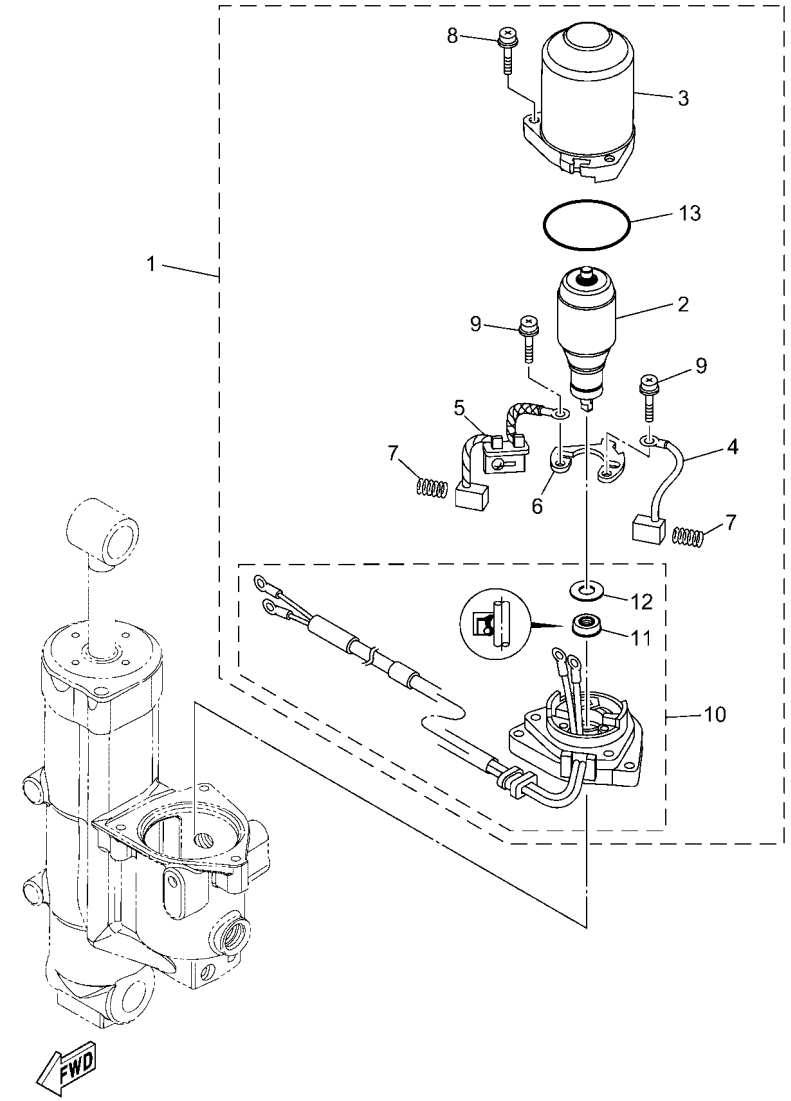

6FP9100-Z260

REF. NO.	PART NO. CODIGO Nº	DESCRIPTION DESCRIPCION	ET	EHT				REMARKS OBSERVACIONES
1	6EK–43880–14	MOTOR ASSY MOTOR COMPL.	1	1				
2	6LH–43805–00	.ARMATURE ASSY .INDUCIDO COMPL.	1	1				
3	6EK–43804–11	.STATOR ASSY .ESTATOR COMPL	1	1				
4	6EK–43892–00	.BRUSH 2 .ESCOBILLA 2	1	1				
5	6EK–82181–00	.CIRCUIT BREAKER COMP. .RUPTOR DE CIRCUITO COMPL	1	1				
6	6EK–4380F–00	.PLATE, BRUSH HOLDER .PLACA	1	1				
7	62X–4386K–00	.SPRING, BRUSH .RESORTE, ESCOBILLA	2	2				
8	63P–43879–10	.SCREW, WITH WASHER .TORNILLO CON RONDANA	3	3				
9	97602–04316	.SCREW, PAN HEAD WITH WASHER .TORNILLO CON RONDONA	2	2				
10	6EK–43881–14	.FRAME, END .CUADRO EXTERMO	1	1				
11	6LH–43882–00	..OIL SEAL ..SELLO ACEITE	1	1				
12	6LH–4387G–00	..WASHER ..ARANDELA	1	1				
13	6EK–43862–01	.O-RING .ANILLO EN O 2	1	1				

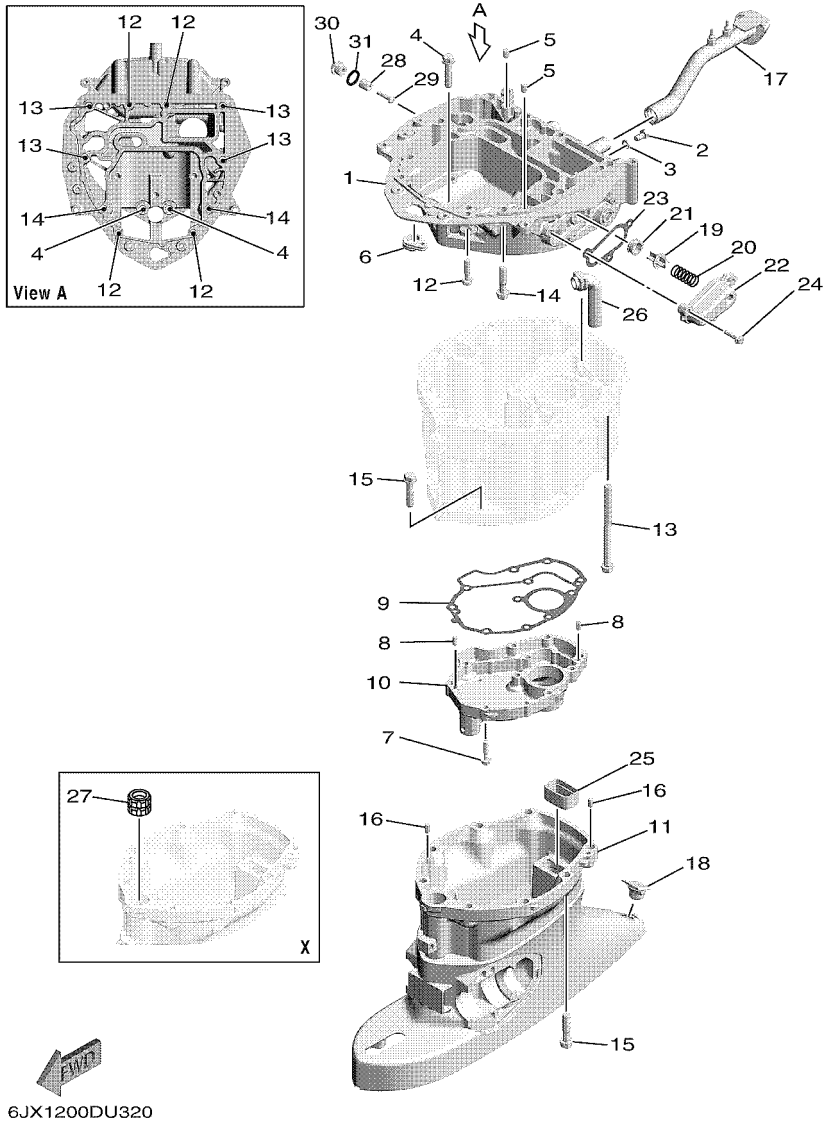

FIG. 32 UPPER CASING — FUNDA SUPERIOR

REF. NO.	PART NO. CODIGO Nº	DESCRIPTION DESCRIPCION	ET	EHT				REMARKS OBSERVACIONES
1	6EK–41137–02–CA	GUIDE, EXHAUST GUIA DE ESCAPE	1	1				
2	97D95–08014	BOLT, HEXAGON DEEP RECESS TORNILLO HEXAGONAL	1	1				
3	90430–08143	GASKET JUNTA	1	1				
4	97E75–10545	BOLT, HEXAGON W/W DEEP RECESS TORNILLO HEXAGONAL CON RONDONA	2	2				
5	93608–12M05	PIN, DOWEL PASADOR DE CLAVIJA	2	2				
6	6EK–42727–01	GROMMET TAPON	1	1				
7	95D95–06030	BOLT, FLANGE DEEP RECESS CERROJO, REBORDE HUECO PROFUND	11	11				
8	93606–12019	PIN, DOWEL PASADOR DE CLAVIJA	2	2				
9	6EK–41134–00	GASKET, EXHAUST MANIFOLD EMPAQUE	1	1				
10	6EK–45181–01	PLATE PLACA	1	1				
11	6EK–45111–00–8D	CASING, UPPER CAJA SUPERIOR	1	1				L(20.3") L(20.3")
	6EK–45111–10–8D	CASING, UPPER CAJA SUPERIOR	1	1				X(25.3") X(25.3")
12	97E75–08535	BOLT, HEXAGON W/W DEEP RECESS TORNILLO HEXAGONAL CON RONDONA	4	4				
13	90119–10007	BOLT, WITH WASHER TORNILLO CON ARANDELA	4	4				
14	97E75–10545	BOLT, HEXAGON W/W DEEP RECESS TORNILLO HEXAGONAL CON RONDONA	2	2				
15	97E75–10545	BOLT, HEXAGON W/W DEEP RECESS TORNILLO HEXAGONAL CON RONDONA	8	8				
16	93606–12019	PIN, DOWEL PASADOR DE CLAVIJA	2	2				
17	6EK–42769–01	SEAL, RUBBER SELLO DE GOMA	1	1				
18	6C5–45155–02	CAP TAPA	1	1				
19	6G5–12416–00	VALVE, PRESSURE CONTROL VALVULA DE CONTROL DE PRESION	1	1				
20	90501–200A2	SPRING, COMPRESSION RESORTE DE COMPRESION	1	1				
21	90480–20M05	GROMMET TAPON	1	1				
22	6EK–1246A–00–9S	COVER 1 CUBIERTA 1	1	1				
23	6EK–12435–A0	GASKET EMPAQUE	1	1				
24	95D95–06025	BOLT, FLANGE DEEP RECESS CERROJO, REBORDE HUECO PROFUND	3	3				
25	67F–45127–00	SEAL SELLO DE GOMA	1	1				
26	6EK–45135–00	PIPE TUBO 1	1	1				

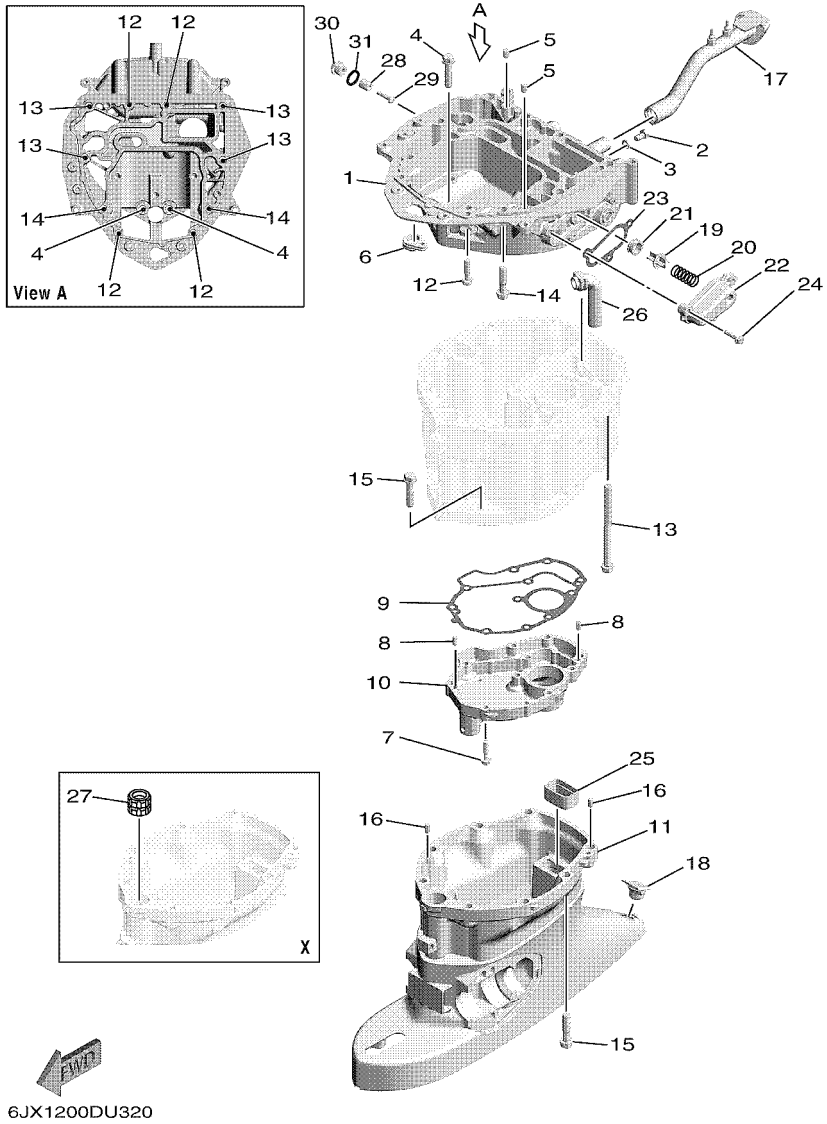

FIG. 32 UPPER CASING — FUNDA SUPERIOR

REF. NO.	PART NO. CODIGO Nº	DESCRIPTION DESCRIPCION	ET	EHT				REMARKS OBSERVACIONES
27	6EK–45318–00	BUSHING, DRIVE SHAFT BUJE, EJE DE MANDO	1	1				X(25.3") X(25.3")
28	6G8–11325–00	ANODE ANODO	1	1				
29	98980–05025	SCREW, BIND TORNILLO DE LIGAR	1	1				
30	6G8–11197–A0	PLUG, BLIND TAPON, CIEGO	1	1				
31	93210–13M63	O-RING ANILLO O	1	1				

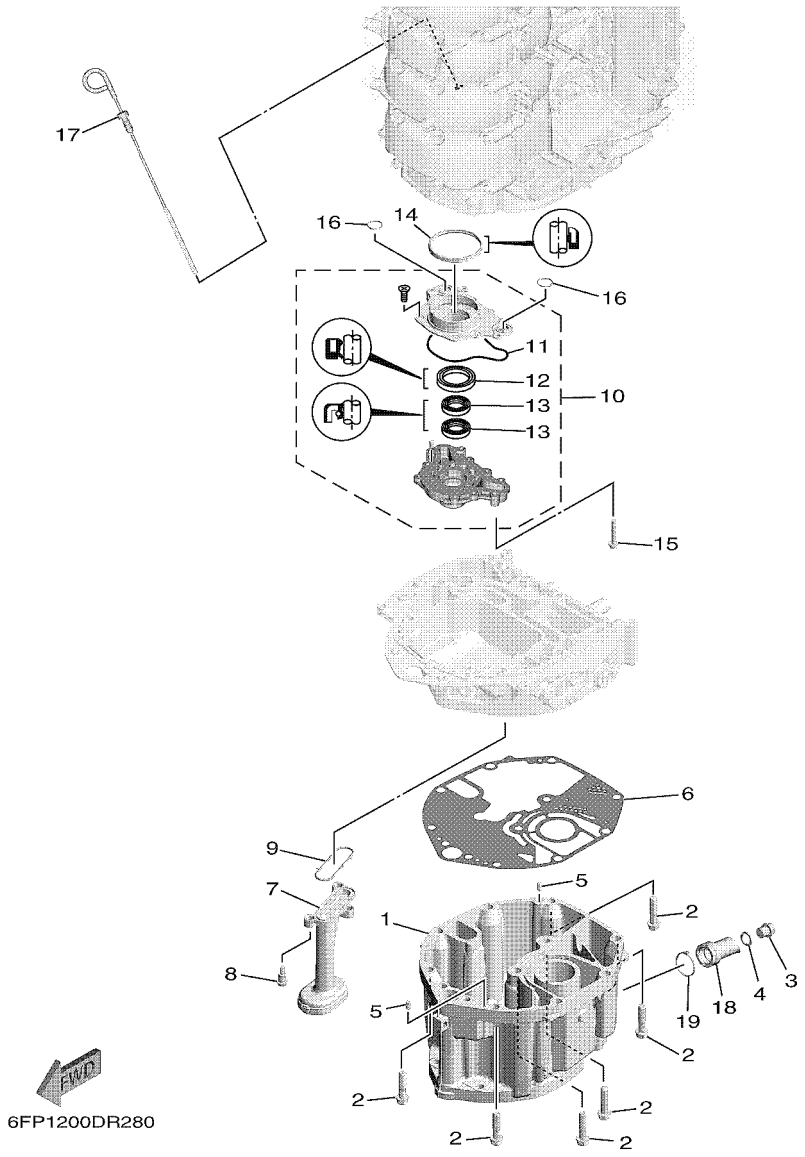

FIG. 33 OIL PAN

OIL PAN

REF. NO.	PART NO. CODIGO Nº	DESCRIPTION DESCRIPCION	ET	EHT				REMARKS OBSERVACIONES
1	6EK–15311–02–CA	OIL PAN BANDEJA DE ACEITE	1	1				
2	97E75–10545	BOLT, HEXAGON W/W DEEP RECESS TORNILLO HEXAGONAL CON RONDONA	6	6				
3	90340–14M06	PLUG, STRAIGHT SCREW TORNILLO, DE DRENAJE	1	1				
4	90430–14M09	GASKET JUNTA	1	1				
5	93606–12019	PIN, DOWEL PASADOR DE CLAVIJA	2	2				
6	6EK–15312–01	GASKET, OIL PAN EMPAQ BANDEJA DE ACEITE	1	1				
7	67F–13411–00	STRAINER, OIL FILTRO DE ACEITE	1	1				
8	90109–06292	BOLT PERNO	3	3				
9	67F–13415–00	SEAL, OIL STRAINER SELLO COLADOR ACEITE	1	1				
10	6EK–13300–00	OIL PUMP ASSY BOMBA DE ACEITE COMPLETA	1	1				
11	6EK–13329–00	.GASKET, PUMP COVER .EMPAQUE TAPA DE BOMBA	1	1				
12	6AW–13119–00	.OIL SEAL .SELLO ACEITE	1	1				
13	69J–13631–00	.OIL SEAL .SELLO ACEITE	2	2				
14	69J–11355–00	SEAL, CYLINDER 1 RETEN ACEITE CILINDRO 1	1	1				
15	90105–06151	BOLT, FLANGE TORNILLO	4	4				
16	93210–19MJ1	O-RING ANILLO O	2	2				
17	6FP–15362–00	PLUG, OIL LEVEL TAPON DEL NIVEL DE ACEITE	1	1				
18	6EK–15316–00	DAMPER 1 AMORTIGUADOR 1	1	1				
19	90465–11M59	CLAMP BRIDA	1	1				

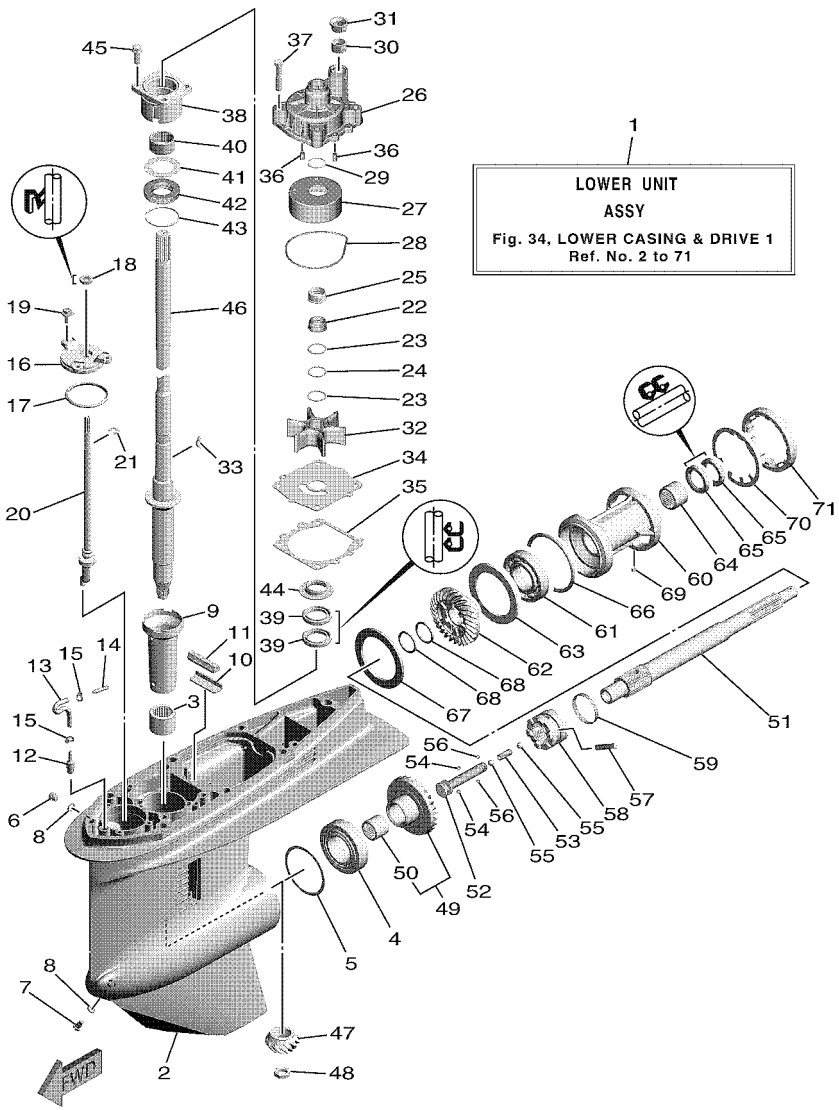

FIG. 34 LOWER CASING & DRIVE 1 — IMPULSOR E INFERIOR 1

REF. NO.	PART NO. CODIGO Nº	DESCRIPTION DESCRIPCION	ET	EHT				REMARKS OBSERVACIONES
1	6JX–45300–01–8D	LOWER UNIT ASSY CONJUNTO UNIDAD INFERIOR	1	1				L(20.3") L(20.3")
	6JX–45300–11–8D	LOWER UNIT ASSY CONJUNTO UNIDAD INFERIOR	1	1				X(25.3") X(25.3")
2	6E5–45301–07–8D	CASING, LOWER FUNDA INFERIOR COMPLETA	1	1				
3	93315–628U9	BEARING COJINETE DE RODILLOS	1	1				
4	93332–000U7	BEARING COJINETE	1	1				
5	6E5–45567–01	SHIM (T:0.10MM) LAMINA(T:0.10MM)	1	1				UR UR
	6E5–45567–10	SHIM (T:0.12MM) LAINA (T:0.12MM)	1	1				UR UR
	6E5–45567–20	SHIM (T:0.15MM) LAINA (T:0.15MM)	1	1				UR UR
	6E5–45567–30	SHIM (T:0.18MM) LAINA (T:0.18MM)	1	1				UR UR
	6E5–45567–40	SHIM (T:0.30MM) LAINA (T:0.30MM)	1	1				UR UR
	6E5–45567–50	SHIM (T:0.40MM) LAINA (T:0.40MM)	1	1				UR UR
	6E5–45567–60	SHIM (T:0.50MM) LAINA (T:0.50MM)	1	1				UR UR
6	90340–08002	PLUG, STRAIGHT SCREW TORNILLO, DE DRENAJE	1	1				
7	688–45341–10	PLUG, DRAIN TAPON, DREN	1	1				
8	90430–08003	GASKET JUNTA	2	2				
9	6E5–45536–00	SLEEVE, DRIVE SHAFT CAMISA EJE DE MANDO	1	1				
10	663–45376–00	GUIDE, SEAL DAMPER GUIA DE SELLO GOMA	1	1				
11	688–45375–00	DAMPER, SEAL GOMA DE SELLO	1	1				
12	6E5–45378–00	NIPPLE, HOSE NIPLE MANGUERA	1	1				
13	90445–07ME8	HOSE (L80) TUBO (L80)	1	1				L(20.3") L(20.3")
	90445–07ME9	HOSE (L120) TUBO (L120)	1	1				X(25.3") X(25.3")
14	6E5–83558–10	END, NIPPLE EXTREMO DE NIPLE	1	1				
15	90465–11M10	CLAMP BRIDA	2	2				
16	6E5–45321–00	PLATE PLACA	1	1				
17	93210–58144	O-RING ANILLO O	1	1				
18	93106–09014	OIL SEAL SELLO ACEITE	1	1				
19	90119–06286	BOLT, WITH WASHER TORNILLO CON ARANDELA	3	3				

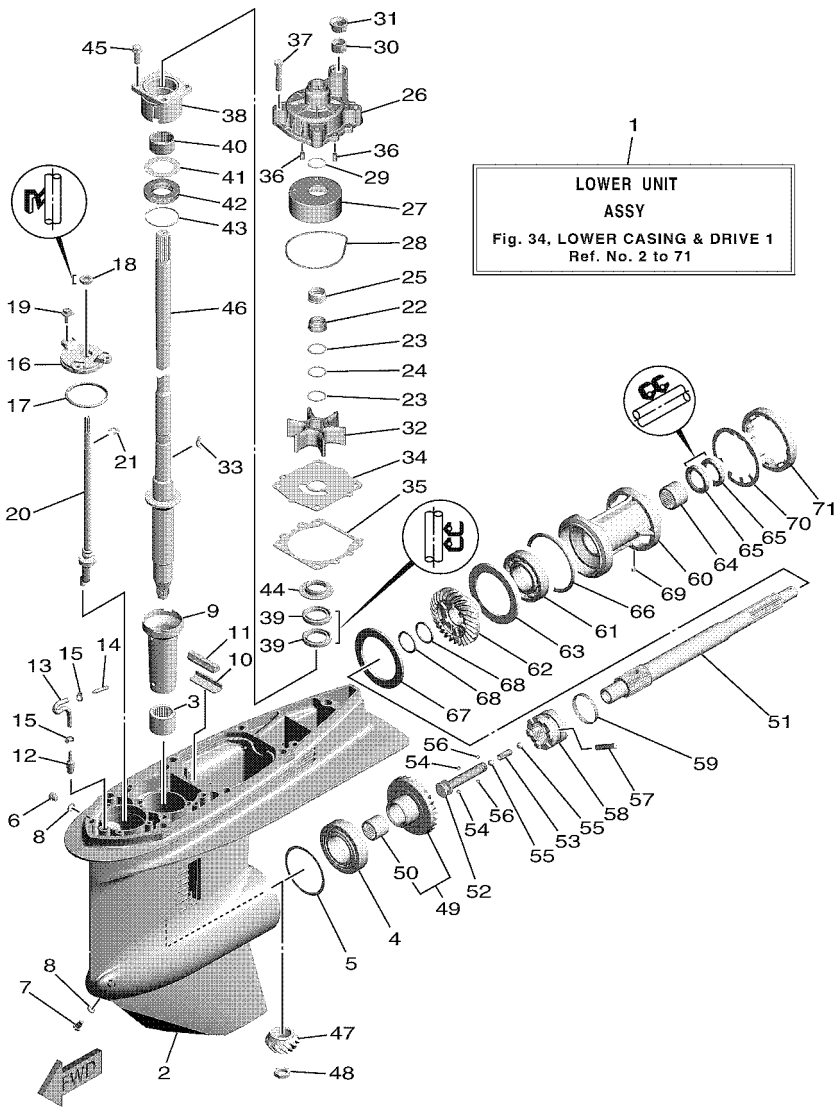

FIG. 34 LOWER CASING & DRIVE 1 — IMPULSOR E INFERIOR 1

REF. NO.	PART NO. CODIGO Nº	DESCRIPTION DESCRIPCION	ET	EHT				REMARKS OBSERVACIONES
20	6E5–44150–03	SHIFT CAM ASSY CONJUNTO EJE LEVA COMPL.	1	1				
21	99001–08600	CIRCLIP PRESILLA REDONDA	1	1				
22	61A–45538–00	SPACER 1 ESPACIADOR 1	1	1				
23	90201–22M01	WASHER, PLATE ARANDELA PLANA	2	2				
24	90206–22M19	WASHER, WAVE ARANDELA ONDULADA	1	1				
25	61A–45527–00	COLLAR, DRIVE SHAFT COLLAR EJE FLECHA DE PROPULSIO	1	1				
26	61A–44311–01	HOUSING, WATER PUMP CAJA BOMBA DE AGUA	1	1				
27	6R3–44322–42	INSERT, CARTRIDGE CARTUCHO	1	1				FOR CHROMATE FOR CHROMATE
28	93210–86M38	O-RING ANILLO O	1	1				
29	93210–37160	O-RING ANILLO O	1	1				
30	6E5–44365–01	DAMPER, WATER SEAL 1 HULE DE SELLO DE AGUA 1	1	1				
31	6E5–44312–00	COVER, WATER PUMP HOUSING CUBIERTA CAJA BOMBA DE AGUA	1	1				
32	6E5–44352–01	IMPELLER IMPULSOR	1	1				
33	90280–04M05	KEY, WOODRUFF CUNA WOODRUFF	1	1				
34	60C–44323–40	OUTER PLATE, CARTRIDGE PLACA EXTERIOR DEL CARTUCHO	1	1				FOR CHROMATE FOR CHROMATE
35	6E5–44315–A0	GASKET, WATER PUMP EMPAQUE	1	1				
36	93606–12019	PIN, DOWEL PASADOR DE CLAVIJA	2	2				
37	90119–08191	BOLT, WITH WASHER TORNILLO CON ARANDELA	4	4				
38	6E5–45331–00–9S	HOUSING, BEARING CAJA DE COJINETE	1	1				
39	93101–28M16	OIL SEAL SELLO ACEITE	2	2				
40	93317–330U2	BEARING COJINETE	1	1				
41	6E5–45587–01	SHIM (T:0.10MM) LAINA (T:0.10MM)	1	1				UR UR
	6E5–45587–10	SHIM (T:0.12MM) LAINA (T:0.12MM)	1	1				UR UR
	6E5–45587–20	SHIM (T:0.15MM) LAINA (T:0.15MM)	1	1				UR UR
	6E5–45587–30	SHIM (T:0.18MM) LAINA (T:0.18MM)	1	1				UR UR
	6E5–45587–40	SHIM (T:0.30MM) LAINA (T:0.30MM)	1	1				UR UR
	6E5–45587–50	SHIM (T:0.40MM) LAINA (T:0.40MM)	1	1				UR UR

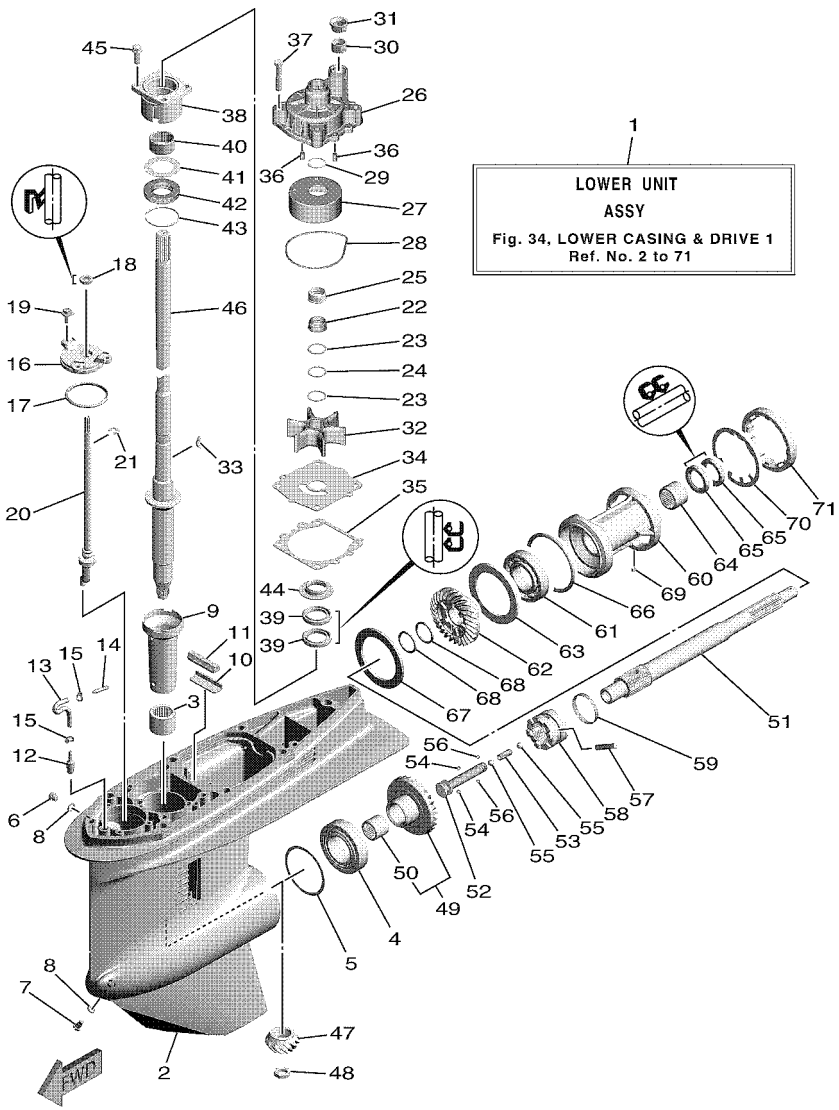

FIG. 34 LOWER CASING & DRIVE 1 — IMPULSOR E INFERIOR 1

REF. NO.	PART NO. CODIGO Nº	DESCRIPTION DESCRIPCION	ET	EHT				REMARKS OBSERVACIONES
41	6E5–45587–60	SHIM (T:0.50MM) LAINA (T:0.50MM)	1	1				UR UR
42	93341–930V2	BEARING COJINETES CON RODAMIENTOS	1	1				
43	93210–55M14	O-RING ANILLO O	1	1				
44	6E5–45344–00	COVER, OIL SEAL CUBIERTA SELLO ACEITE	1	1				
45	97E95–08525	BOLT, HEXAGON W/W DEEP RECESS TORNILLO HEXAGONAL CON RONDONA	4	4				
46	6EK–45501–00	DRIVE SHAFT COMP. EJE DE MANDO COMPL.	1	1				L(20.3") L(20.3")
	6EK–45501–10	DRIVE SHAFT COMP. EJE DE MANDO COMPL.	1	1				X(25.3") X(25.3")
47	68V–45551–00	PINION (13T) PINON (13T)	1	1				
48	90170–16M01	NUT TUERCA	1	1				
49	68V–45560–00	GEAR 1 (28T) ENGRANAJE 1 (28T)	1	1				
50	93315–425U7	.BEARING .COJINETE DE RODILLOS	1	1				
51	6E5–45611–01	SHAFT, PROPELLER EJE PROPUSOR	1	1				
52	6E5–45634–02	SLIDE, SHIFT DESLIZADOR, CAMBIO	1	1				
53	90501–16M37	SPRING, COMPRESSION RESORTE DE COMPRESION	1	1				
54	93507–32009	BALL ESFERA	2	2				
55	93511–32017	BALL ESFERA	2	2				
56	93503–16003	BALL ESFERA	2	2				
57	90250–08M07	PIN, STRAIGHT PASADOR CILINDRICO	1	1				
58	68V–45631–02	CLUTCH, DOG EMBRAGUE DE GARRA	1	1				
59	6E5–45633–01	RING, CROSS PIN ANILLO DE PASADOR	1	1				
60	6E5–45332–00–CA	HOUSING, BEARING CAJA BALERO 2	1	1				
61	93306–208U0	BEARING COJINETE	1	1				
62	68V–45571–00	GEAR 2 (28T) ENGRANAJE 2 (28T)	1	1				
63	6E5–45576–00	WASHER, THRUST 2 ARANDELA DE EMPUJE AXIAL 2	1	1				
64	93315–430U8	BEARING COJINETE DE RODILLOS	1	1				
65	93101–30M17	OIL SEAL SELLO ACEITE	2	2				
66	93210–86M39	O-RING ANILLO O	1	1				

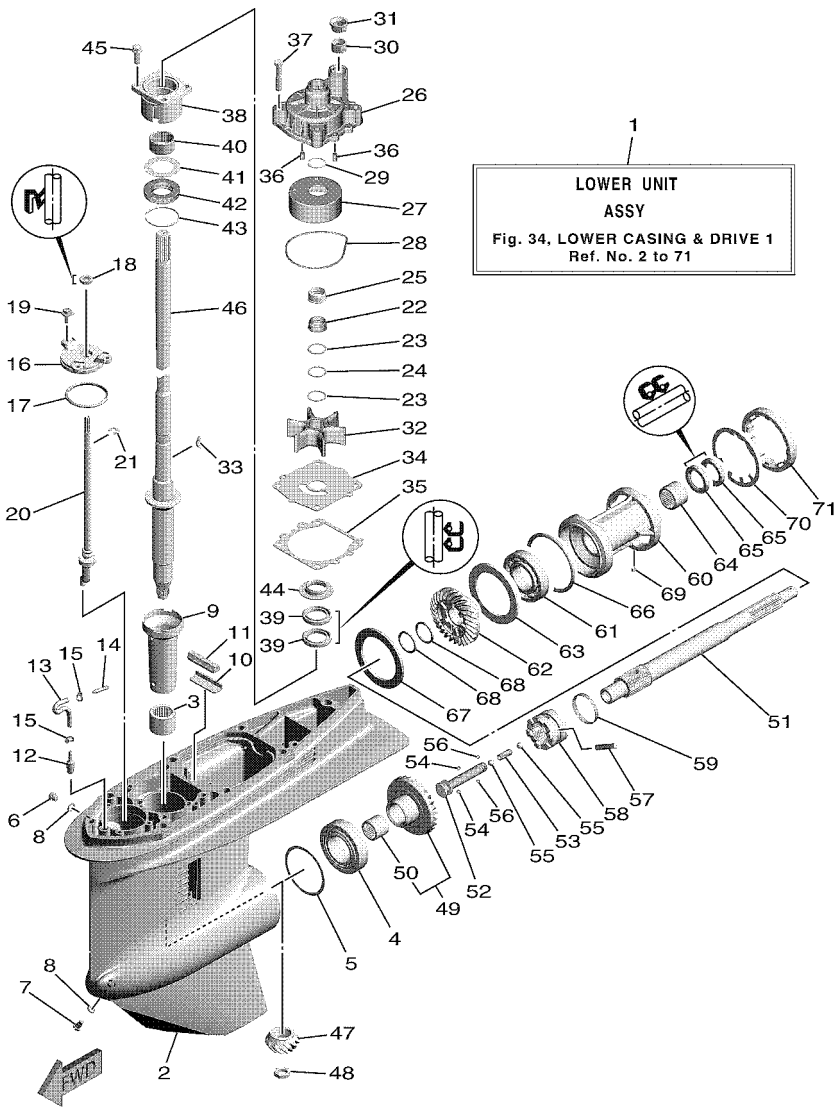

FIG. 34 LOWER CASING & DRIVE 1 — IMPULSOR E INFERIOR 1

REF. NO.	PART NO. CODIGO Nº	DESCRIPTION DESCRIPCION	ET	EHT				REMARKS OBSERVACIONES
67	6L6–45577–00	SHIM (T:0.10MM) LAINA (T:0.10MM)	1	1				UR UR
	6L6–45577–10	SHIM (T:0.12MM) LAINA (:0.12MM)	1	1				UR UR
	6L6–45577–20	SHIM (T:0.15MM) LAINA (T:0.15MM)	1	1				UR UR
	6L6–45577–30	SHIM (T:0.18MM) LAINA (T:0.18MM)	1	1				UR UR
	6L6–45577–40	SHIM (T:0.30MM) LAINA (T:0.30MM)	1	1				UR UR
	6L6–45577–50	SHIM (T:0.40MM) LAINA (T:0.40MM)	1	1				UR UR
	6L6–45577–60	SHIM (T:0.50MM) LAINA (T:0.50MM)	1	1				UR UR
68	90201–30M92	WASHER, PLATE ARANDELA PLANA	2	2				
69	90282–04010	KEY, STRAIGHT CHAVETA, RECTA	1	1				
70	688–45383–02	WASHER, CLAW ARANDELA DE UNA	1	1				
71	688–45384–02	NUT TUERCA	1	1				

FIG. 35 LOWER CASING & DRIVE 2 — IMPULSOR E INFERIOR 2

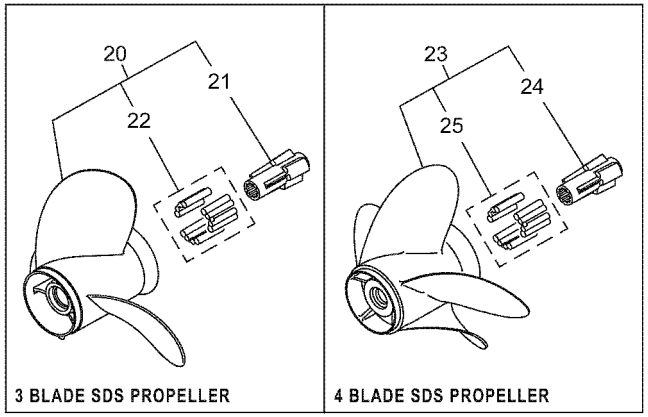

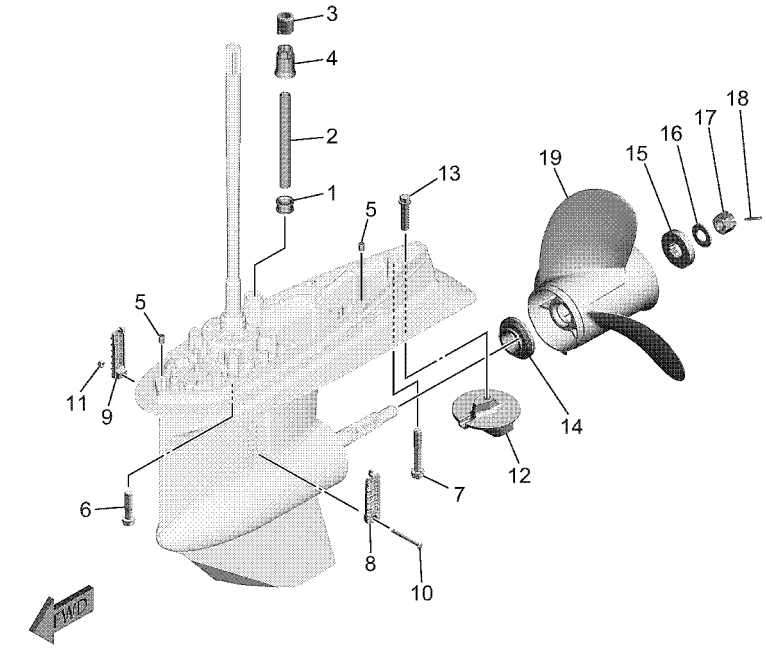

6HW9100DZ300

REF. NO.	PART NO. CODIGO Nº	DESCRIPTION DESCRIPCION	ET	EHT				REMARKS OBSERVACIONES
1	6E5–44366–01	DAMPER, WATER SEAL 2 GOMA DEL SELLO DE AGUA 2	1	1				
2	90440–16001	PIPE (L167) TUBO (L167)	1	1				L(20.3") L(20.3")
	90440–16002	PIPE (L294) TUBO (L294)	1	1				X(25.3") X(25.3")
3	6EK–44365–01	DAMPER, WATER SEAL 1 HULE DE SELLO DE AGUA 1	1	1				
4	6EK–44379–00	GUIDE, WATER TUBE GUIA DE TUBO DE AGUA	1	1				
5	93608–12M05	PIN, DOWEL PASADOR DE CLAVIJA	2	2				
6	97E95–10545	BOLT, HEXAGON W/W DEEP RECESS TORNILLO HEXAGONAL CON RONDONA	6	6				
7	90119–10071	BOLT, WITH WASHER TORNILLO CON ARANDELA	1	1				
8	688–45214–02	COVER, WATER INLET 1 CUBIERTA, ENTRADA AGUA 1	1	1				
9	688–45215–02	COVER, WATER INLET 2 CUBIERTA, ENTRADA AGUA 2	1	1				
10	90152–05M07	SCREW, COUNTERSUNK TORNILLO EMBUTIDO	1	1				
11	90185–05002	NUT, NYLON TUERCA AUTOBLOCANTE	1	1				
12	6E5–45371–01	TAB-TRIM QUILLA ESTABILIZADOR	1	1				
13	90105–10M00	BOLT, FLANGE TORNILLO	1	1				
14	6E5–45987–01	SPACER 1 ESPACIADOR 1	1	1				
15	688–45997–01	SPACER 2 ESPACIADOR 2	1	1				
16	92990–18200	WASHER ARANDELA PLANA	1	1				
17	90171–18M04	NUT, CASTLE TUERCA ENTALLADA	1	1				
18	91490–40030	PIN. COTTER CHAVETA	1	1				
19	6E5–45954–00	PROPELLER (3X14"X11"-K) PROPELA (3X14"X11"-K)	1	1				UR UR
	6E5–45949–00	PROPELLER (3X13-5/8"X13"-K) PROPELA (3X13-5/8"X13"-K)	1	1				UR UR
	6E5–45958–00	PROPELLER (3X13-5/8"X14"-K) PROPELA (3X13-5/8"X14"-K)	1	1				UR UR
	6E5–45947–00	PROPELLER (3X13-1/2"X15"-K) PROPELA (3X13-1/2"X15"-K)	1	1				UR UR
	6E5–45945–01	PROPELLER (3X13-1/4"X17"-K) PROPELA (3X13-1/4"X17"-K)	1	1				UR UR
	6E5–45941–00	PROPELLER (3X13"X19"-K) PROPELA (3X13"X19"-K)	1	1				UR UR
	6E5–45943–00	PROPELLER (3X12-5/8"X21"-K) PROPELA (3X12-5/8"X21"-K)	1	1				UR UR
	6E5–45952–00	PROPELLER (3X13"X23"-K) PROPELA (3X13"X23"-K)	1	1				UR UR

FIG. 35 LOWER CASING & DRIVE 2 — IMPULSOR E INFERIOR 2

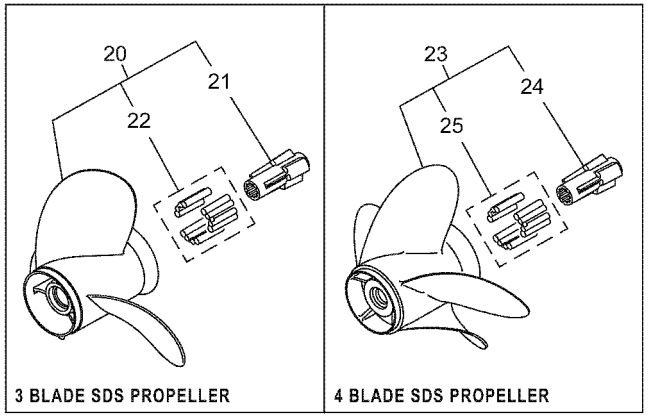

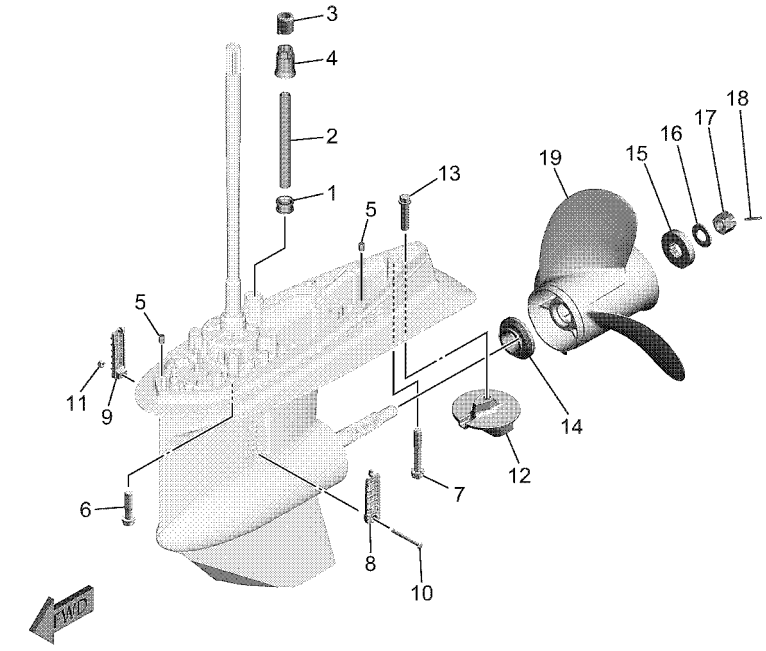

6HW9100DZ300

REF. NO.	PART NO. CODIGO Nº	DESCRIPTION DESCRIPCION	ET	EHT				REMARKS OBSERVACIONES
19	6E5–45956–00	PROPELLER (3X13"X25"-K) PROPELA (3X13"X25"-K)	1	1				UR UR
	68V–45941–00	PROPELLER (3X13-1/2"X17"-K) PROPELA (3X13-1/2"X17"-K)	1	1				UR UR
	68V–45943–00	PROPELLER (3X13-1/2"X19"-K) PROPELA (3X13-1/2"X19"-K)	1	1				UR UR
	688–45932–60	PROPELLER (3X13-1/2"X14"-K) PROPELA (3X13-1/2"X14"-K)	1	1				UR UR
	688–45978–60	PROPELLER (3X13-1/2"X16"-K) PROPELA (3X13-1/2"X16"-K)	1	1				UR UR
	688–45930–02	PROPELLER (3X13"X17"-K2) PROPELA (3X13"X17"-K2)	1	1				UR UR
	688–45970–03	PROPELLER (3X13"X19"-K) PROPELA (3X13"X19"-K)	1	1				UR UR
	688–45972–02	PROPELLER (3X13"X21"-K) PROPELA (3X13"X21"-K)	1	1				UR UR
	688–45974–02	PROPELLER (3X13"X23"-K) PROPELA (3X13"X23"-K)	1	1				UR UR
	688–45976–01	PROPELLER (3X13"X25"-K) PROPELA (3X13"X25"-K)	1	1				UR UR
	62A–45976–00	PROPELLER (3X13-1/2"X17"-K) PROPELA (3X13-1/2"X17"-K)	1	1				UR UR
	62A–45974–10	PROPELLER (3X13-1/2"X19"-K) PROPELA (3X13-1/2"X19"-K)	1	1				UR UR
	62A–45970–10	PROPELLER (3X13-1/2"X21"-K) PROPELA (3X13-1/2"X21"-K)	1	1				UR UR
	62A–45972–10	PROPELLER (3X13-1/2"X23"-K) PROPELA (3X13-1/2"X23"-K)	1	1				UR UR
20	6EK–45941–00	PROPELLER (3X13-1/2"X9"-K) PROPELA (3X13-1/2"X9"-K)	1	1				UR SDS 3 BLADE UR SDS 3 BLADE
	6EK–45943–00	PROPELLER (3X13-1/2"X10-1/2"-K PROPELA (3X13-1/2"X10-1/2"-K)	1	1				UR SDS 3 BLADE UR SDS 3 BLADE
	6EK–45945–00	PROPELLER (3X13-1/2"X12"-K) PROPELA (3X13-1/2"X12"-K)	1	1				UR SDS 3 BLADE UR SDS 3 BLADE
	6EK–45947–00	PROPELLER (3X13-1/2"X14"-K) PROPELA (3X13-1/2"X14"-K)	1	1				UR SDS 3 BLADE UR SDS 3 BLADE
	6EK–45949–00	PROPELLER (3X13-1/2"X16"-K) PROPELA (3X13-1/2"X16"-K)	1	1				UR SDS 3 BLADE UR SDS 3 BLADE
	6FP–45941–00	PROPELLER (AL 3X13-5/8"X14"-K) PROPELA (AL 3X13-5/8"X14"-K)	1	1				UR SDS 3 BLADE UR SDS 3 BLADE
	6FP–45943–00	PROPELLER (AL 3X13-1/2"X15"-K) PROPELA (AL 3X13-1/2"X15"-K)	1	1				UR SDS 3 BLADE UR SDS 3 BLADE
	6FP–45945–00	PROPELLER (AL 3X13-1/4"X16"-K) PROPELA (AL 3X13-1/4"X16"-K)	1	1				UR SDS 3 BLADE UR SDS 3 BLADE
	6FP–45947–00	PROPELLER (AL 3X13-1/8"X17"-K) PROPELA (AL 3X13-1/8"X17"-K)	1	1				UR SDS 3 BLADE UR SDS 3 BLADE
	6FP–45949–00	PROPELLER (AL 3X13"X18"-K) PROPELA (AL 3X13"X18"-K)	1	1				UR SDS 3 BLADE UR SDS 3 BLADE
	6N7–45970–00	PROPELLER (3X13-1/8"X14"-K) PROPELA (3X13-1/8"X14"-K)	1	1				UR SDS 3 BLADE UR SDS 3 BLADE
	6N7–45972–00	PROPELLER (3X13-1/8"X16"-K) PROPELA (3X13-1/8"X16"-K)	1	1				UR SDS 3 BLADE UR SDS 3 BLADE
	6N7–45974–00	PROPELLER (3X13-1/8"X18"-K) PROPELA (3X13-1/8"X18"-K)	1	1				UR SDS 3 BLADE UR SDS 3 BLADE

FIG. 35 LOWER CASING & DRIVE 2 — IMPULSOR E INFERIOR 2

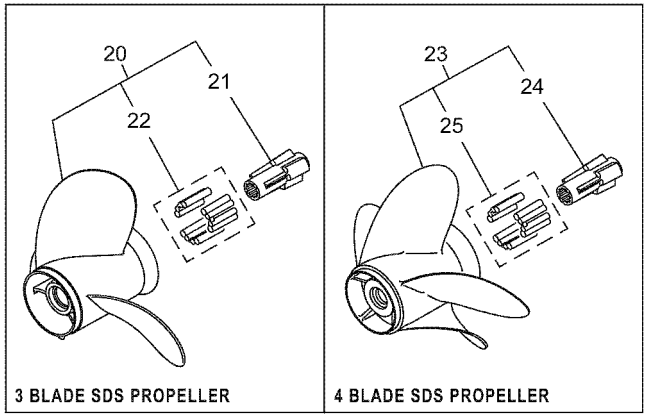

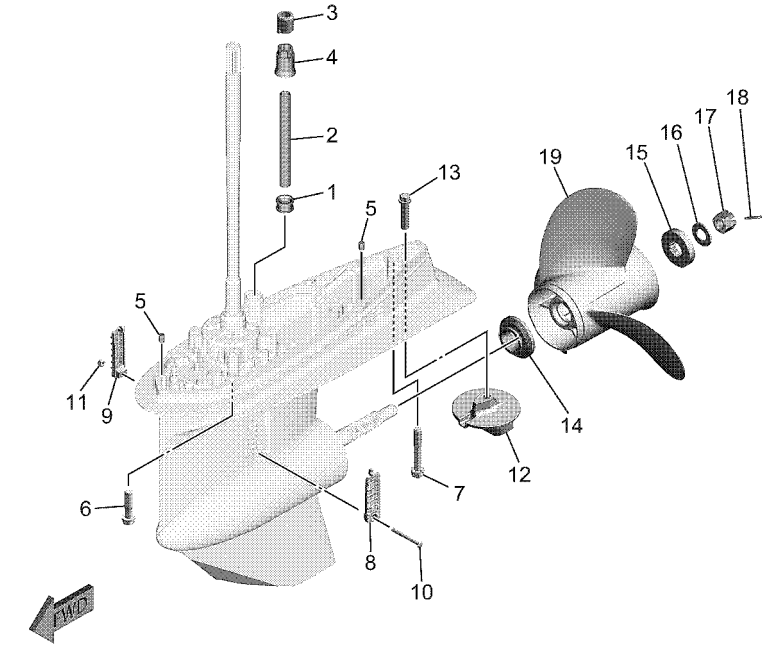

6HW9100DZ300

REF. NO.	PART NO. CODIGO Nº	DESCRIPTION DESCRIPCION	ET	EHT				REMARKS OBSERVACIONES
20	6N7–45976–00	PROPELLER (3X13-1/8"X19"-K) PROPELA (3X13-1/8"X19"-K)	1	1				UR SDS 3 BLADE UR SDS 3 BLADE
	6N7–45978–00	PROPELLER (3X13-1/8"X20"-K) PROPELA (3X13-1/8"X20"-K)	1	1				UR SDS 3 BLADE UR SDS 3 BLADE
	6N7–45930–00	PROPELLER (3X13-1/8"X22"-K) PROPELA (3X13-1/8"X22"-K)	1	1				UR SDS 3 BLADE UR SDS 3 BLADE
	6N7–45932–00	PROPELLER (3X13-1/8"X24"-K) PROPELA (3X13-1/8"X24"-K)	1	1				UR SDS 3 BLADE UR SDS 3 BLADE
	6H1–45970–00	PROPELLER (3X14"X9"-K) PROPELA (3X14"X9"-K)	1	1				UR SDS 3 BLADE UR SDS 3 BLADE
	6H1–45972–00	PROPELLER (3X14"X10"-K) PROPELA (3X14"X10"-K)	1	1				UR SDS 3 BLADE UR SDS 3 BLADE
	6H1–45974–00	PROPELLER (3X14"X11"-K) PROPELA (3X14"X11"-K)	1	1				UR SDS 3 BLADE UR SDS 3 BLADE
	6H1–45976–00	PROPELLER (3X14"X12"-K) PROPELA (3X14"X12"-K)	1	1				UR SDS 3 BLADE UR SDS 3 BLADE
	6H1–45978–00	PROPELLER (3X14"X13"-K) PROPELA (3X14"X13"-K)	1	1				UR SDS 3 BLADE UR SDS 3 BLADE
21	6EK–45982–00	.BUSH, PROPELLER .BUJE DE PROPELA	1	1				
22	6EK–45C82–09	.DAMPER RUBBER, PROPELLER 2 .AMORTIGUADOR PROPELA 2	1	1				
23	6N6–45B70–00	PROPELLER (4X13-1/4"X14"-X) PROPELA (4X13-1/4"X14"-X)	1	1				UR SDS 4 BLADE UR SDS 4 BLADE
	6N6–45B72–00	PROPELLER (4X13-1/4"X16"-X) PROPELA (4X13-1/4"X16"-X)	1	1				UR SDS 4 BLADE UR SDS 4 BLADE
	6N6–45B74–00	PROPELLER (4X13-1/4"X18"-X) PROPELA (4X13-1/4"X18"-X)	1	1				UR SDS 4 BLADE UR SDS 4 BLADE
	6N6–45B76–00	PROPELLER (4X13-1/4"X20"-X) PROPELA (4X13-1/4"X20"-X)	1	1				UR SDS 4 BLADE UR SDS 4 BLADE
	6N6–45B78–00	PROPELLER (4X13-1/4"X22"-X) PROPELA (4X13-1/4"X22"-X)	1	1				UR SDS 4 BLADE UR SDS 4 BLADE
	6N6–45B80–00	PROPELLER (4X13-1/4"X23"-X) PROPELA (4X13-1/4"X23"-X)	1	1				UR SDS 4 BLADE UR SDS 4 BLADE
24	6EK–45982–00	.BUSH, PROPELLER .BUJE DE PROPELA	1	1				
25	6EK–45C82–09	.DAMPER RUBBER, PROPELLER 2 .AMORTIGUADOR PROPELA 2	1	1				

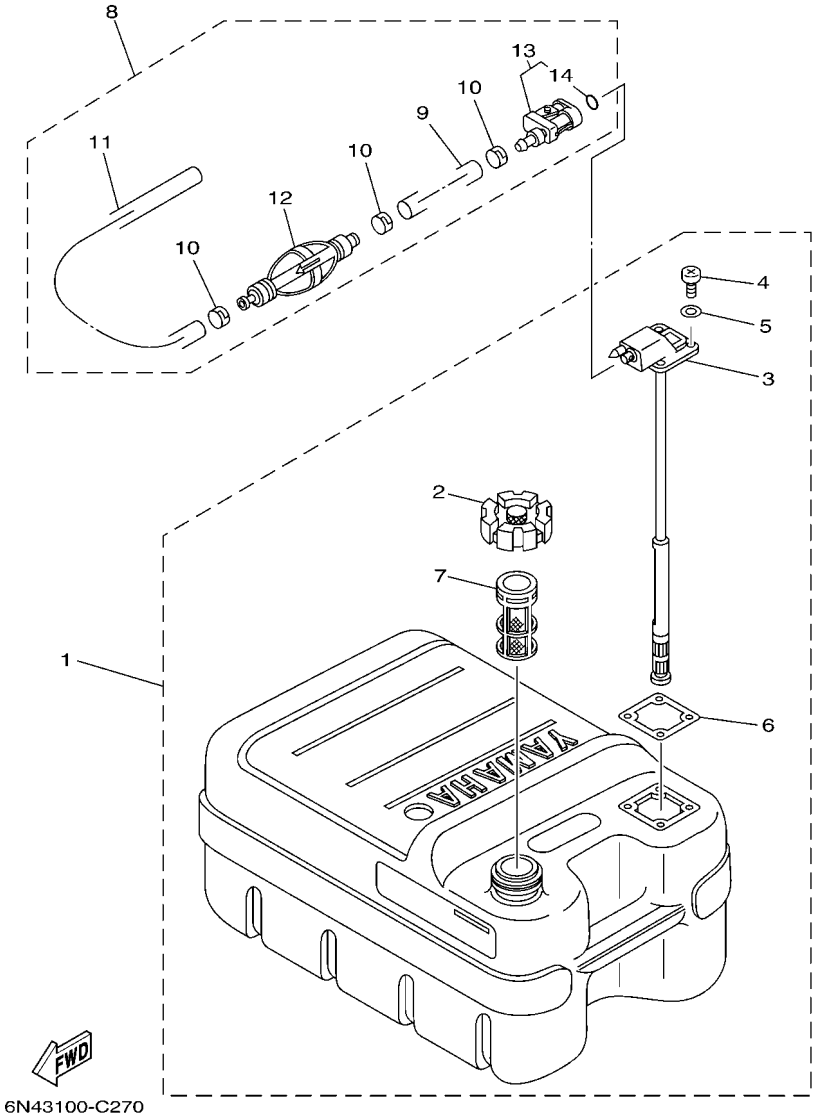

FIG. 36 FUEL TANK 1 — DEPOSITO DE COMBUSTIBLE 1

REF. NO.	PART NO. CODIGO Nº	DESCRIPTION DESCRIPCION	ET	EHT				REMARKS OBSERVACIONES
1	6YJ–24201–21	FUEL TANK ASSY (24L) TANQUE DEL COMBUSTIBLE (24L)	1	1				AP F75F AP F75F
2	6YJ–24610–01	.CAP ASSY .TAPA COMPLETA	1	1				
3	6YJ–24260–11	.FUEL METER ASSY .MEDIDOR DE COMBUSTIBLE COMPL.	1	1				
4	90157–05M19	.SCREW, PAN HEAD .TORNILLO CABEZA CONICA PLANA	4	4				
5	6Y1–24329–00	.SEAL .SELLO	4	4				
6	6Y1–24268–01	.GASKET, FUEL METER .EMPAQ MEDIDOR DE COMBUSTIBLE	1	1				
7	6YJ–24167–00	.STRAINER .COLADOR	1	1				
8	6Y2–24306–46	FUEL PIPE COMP. 1 TUBO COMBUST. COMPL 1	1	1				AP F75F AP F75F
9	90445–13M25	.HOSE (L2050) .MANGUERA (L2050)	1	1				
10	6E5–24351–51	.BAND 1 .ABRAZADERA 1	3	3				
11	90445–13M26	.HOSE (L250) .MANGUERA (L250)	1	1				
12	6Y2–24360–60	.PRIMER PUMP ASSY .SOPORTE BOMBA	1	1				
13	6Y2–24305–06	.FUEL PIPE JOINT COMP. 2 .CONECTOR MANGUERA COMBUST. 2	1	1				
14	93210–08287	..O-RING ..ANILLO O	1	1				

FIG. 37 FUEL TANK 2 — DEPOSITO DE COMBUSTIBLE 2

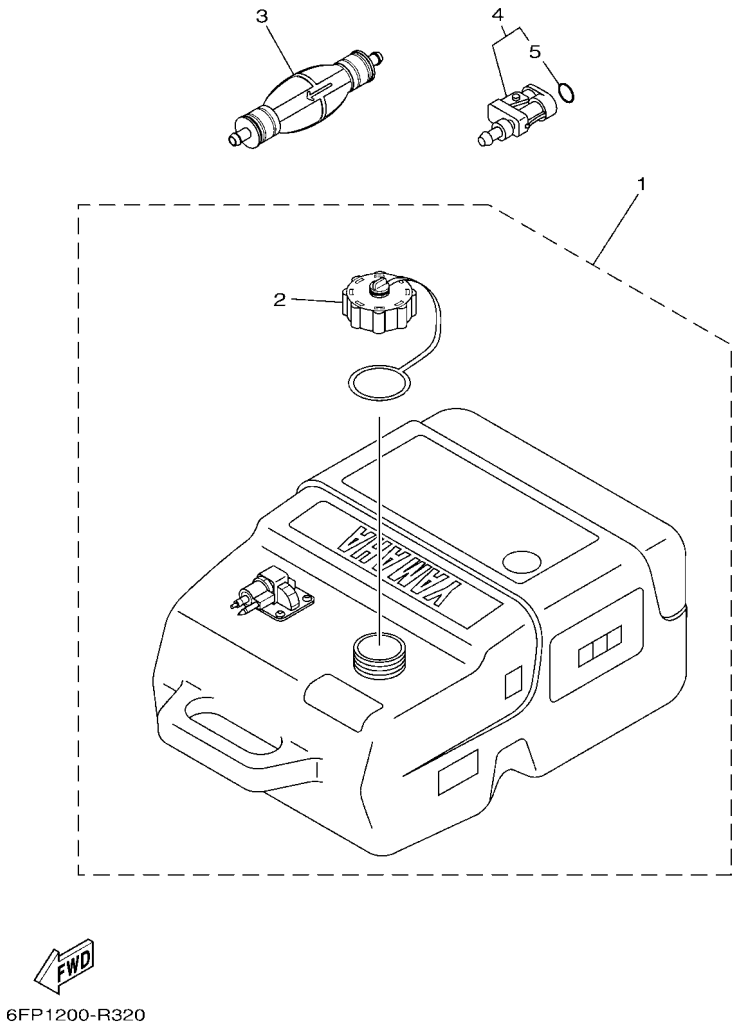

REF. NO.	PART NO. CODIGO Nº	DESCRIPTION DESCRIPCION	ET	EHT				REMARKS OBSERVACIONES
1	6YK–24201–44	FUEL TANK ASSY (25L) TANQUE DEL COMBUSTIBLE (25L)	1					AP F100G CAR(EPA CE) AP F100G CAR(EPA CE)
2	6YL–24610–10	.CAP ASSY .TAPA COMPLETA	1					
3	6YK–24360–73	PRIMER PUMP ASSY SOPORTE BOMBA	1					AP F100G CAR(EPA CE) AP F100G CAR(EPA CE)
4	6Y2–24305–06	FUEL PIPE JOINT COMP. 2 CONECTOR MANGUERA COMBUST. 2	1					AP F100G CAR(EPA CE) AP F100G CAR(EPA CE)
5	93210–08287	.O-RING .ANILLO O	1					

FIG. 38 FUEL TANK 3 — DEPOSITO DE COMBUSTIBLE 3

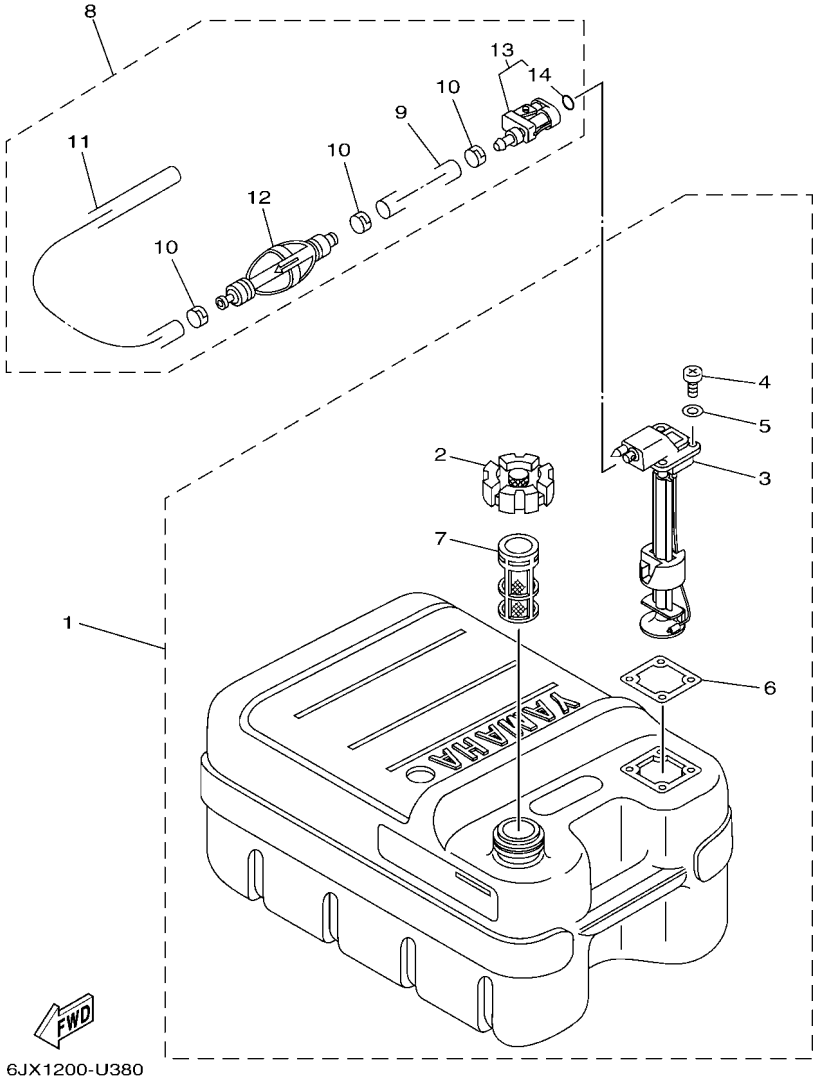

REF. NO.	PART NO. CODIGO Nº	DESCRIPTION DESCRIPCION	ET	EHT				REMARKS OBSERVACIONES
1	6YJ–24201–31	FUEL TANK ASSY (24L) TANQUE DEL COMBUSTIBLE (24L)	1	1				AP F100G EXCEPT CAR(EPA CE) AP F100G EXCEPT CAR(EPA CE)
2	6YJ–24610–01	.CAP ASSY .TAPA COMPLETA	1	1				
3	6Y1–24260–30	.FUEL METER ASSY .MEDIDOR DE COMBUSTIBLE COMPL.	1	1				WITH INDICATOR WITH INDICATOR
4	90157–05M19	.SCREW, PAN HEAD .TORNILLO CABEZA CONICA PLANA	4	4				
5	6Y1–24329–00	.SEAL .SELLO	4	4				
6	6Y1–24268–01	.GASKET, FUEL METER .EMPAQ MEDIDOR DE COMBUSTIBLE	1	1				
7	6YJ–24167–00	.STRAINER .COLADOR	1	1				
8	6Y2–24306–46	FUEL PIPE COMP. 1 TUBO COMBUST. COMPL 1	1	1				AP F100G EXCEPT CAR(EPA CE) AP F100G EXCEPT CAR(EPA CE)
9	90445–13M25	.HOSE (L2050) .MANGUERA (L2050)	1	1				
10	6E5–24351–51	.BAND 1 .ABRAZADERA 1	3	3				
11	90445–13M26	.HOSE (L250) .MANGUERA (L250)	1	1				
12	6Y2–24360–60	.PRIMER PUMP ASSY .SOPORTE BOMBA	1	1				
13	6Y2–24305–06	.FUEL PIPE JOINT COMP. 2 .CONECTOR MANGUERA COMBUST. 2	1	1				
14	93210–08287	..O-RING ..ANILLO O	1	1				

FIG. 39 STEERING GUIDE DIRECCIONGUIAR

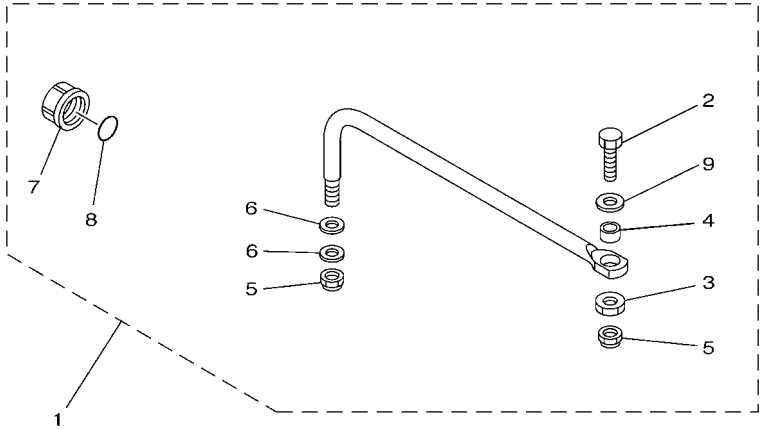

6EK1100-N330

REF. NO.	PART NO. CODIGO Nº	DESCRIPTION DESCRIPCION	ET	EHT				REMARKS OBSERVACIONES
1	6EK–61350–00	STEERING GUIDE ATTACHMENT KIT ESTUCHE ADITAMENTO GUIA DE TIM	1					AP AP
2	6E5–61355–00	.BOLT .TORNILLO	1					
3	90170–09M03	.NUT .TUERCA	1					
4	90387–10M42	.COLLAR .ESPACIADOR	1					
5	90185–09M01	.NUT, SELF-LOCKING .TUERCA AUTOBLOCANTE	2					
6	90201–10M20	.WASHER, PLATE .ARANDELA PLANA	2					
7	6E5–43145–01	.CAP, CLAMP BRACKET .TAPA	1					
8	93210–16275	.O-RING .ANILLO O	1					
9	90201–10081	.WASHER, PLATE .ARANDELA PLANA	1					

FIG. 40 REMOTE CONTROL BOX — CONTROL REMOTO COMPLETO

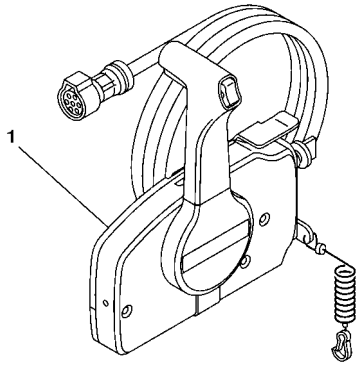

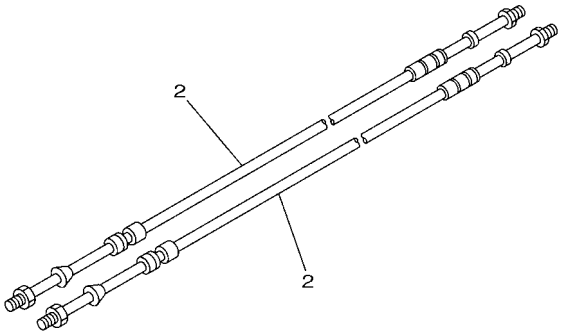

63PD370-P320

REF. NO.	PART NO. CODIGO Nº	DESCRIPTION DESCRIPCION	ET	EHT				REMARKS OBSERVACIONES
1	703–48205–B5	REMOTE CONTROL ASSY (10P, PTT) REMOTO CONTROL COMPL. (10P)	1					AP EXCEPT CAR WITH PT/T SW. AP EXCEPT CAR WITH PT/T SW.
	703–48205–25	REMOTE CONTROL ASSY (10P, PTT) REMOTO CONTROL COMPL. (10P)	1					AP CAR WITH PT/T SW. AP CAR WITH PT/T SW.
2	701–48320–50	CABLE, REMOTE CONTROL L=15F CABLE CONTROL REMOTO L=15F	2					UR UR
	701–48320–60	CABLE, REMOTE CONTROL L=16F CABLE CONTROL REMOTO L=16F	2					UR UR
	701–48320–80	CABLE, REMOTE CONTROL L=17F CABLE CONTROL REMOTO L=17F	2					UR UR
	701–48350–00	CABLE, REMOTE CONTROL L=21F CABLE CONTROL REMOTO L=21F	2					UR UR
	701–48350–10	CABLE, REMOTE CONTROL L=22F CABLE CONTROL REMOTO L=22F	2					UR UR
	701–48350–20	CABLE, REMOTE CONTROL L=23F CABLE CONTROL REMOTO L=23F	2					UR UR

FIG. 41 REMOTE CONTROL ASSY — CONTROL REMOTO COMPL

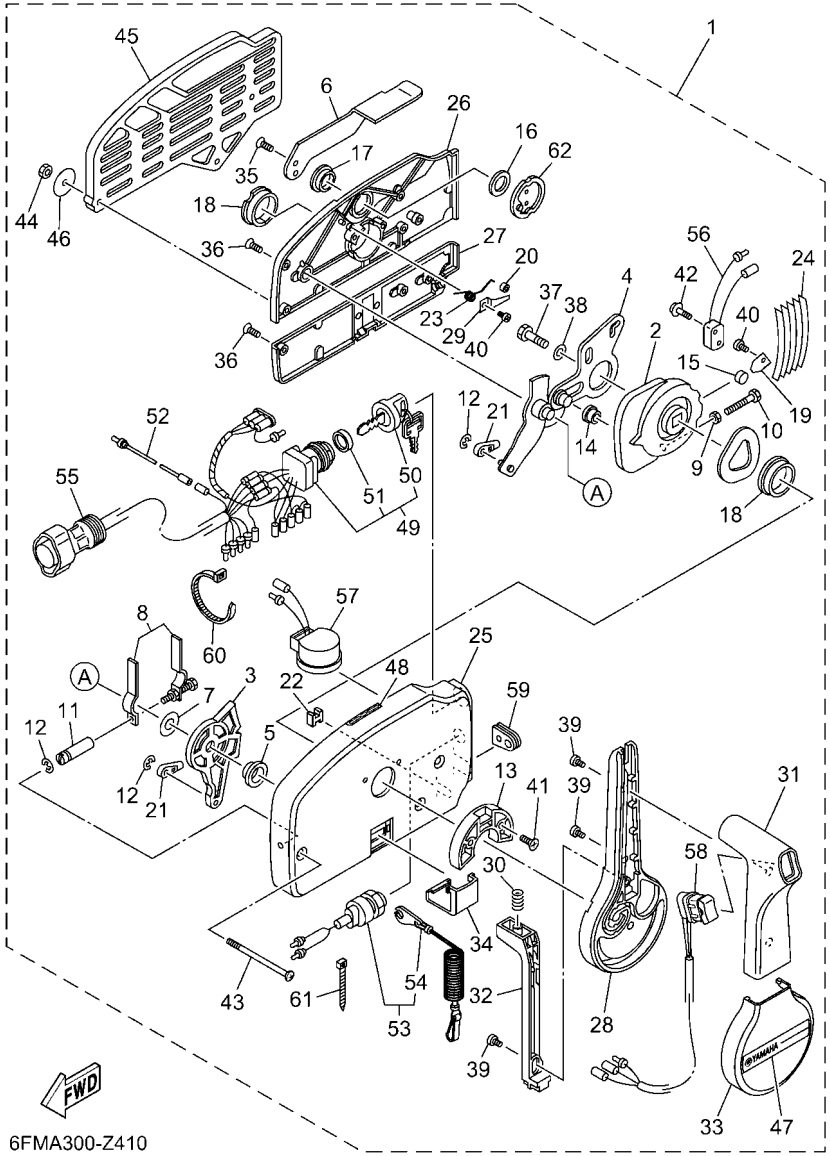

REF. NO.	PART NO. CODIGO Nº	DESCRIPTION DESCRIPCION	ET	EHT				REMARKS OBSERVACIONES
1	703–48205–B5	REMOTE CONTROL ASSY (10P, PTT) REMOTO CONTROL COMPL. (10P)	1					AP EXCEPT CAR WITH PT/T SW. AP EXCEPT CAR WITH PT/T SW.
	703–48205–25	REMOTE CONTROL ASSY (10P, PTT) REMOTO CONTROL COMPL. (10P)	1					AP CAR WITH PT/T SW. AP CAR WITH PT/T SW.
2	703–48232–00	.GEAR .ENGRANAJE 1	1					
3	703–48271–00	.ARM, SHIFT .BRAZO CAMBIADOR	1					
4	703–48261–01	.ARM, THROTTLE .BRAZO ACELERADOR	1					
5	703–48235–00	.BUSHING .BUJE	1					
6	703–48152–10	.KNOB, FREE ACCEL. .PERILLA	1					
7	703–48268–00	.SPACER .ESPACIADOR 3	1					
8	703–48264–00	.FRICTION, THROTTLE .FRICCION DE ACELERADOR	1					
9	95380–05600	.NUT .TUERCA	1					
10	97380–05025	.BOLT .TORNILLO HEXAGONAL	1					
11	703–48265–10	.SHAFT, FRICTION .EJE FRICCION	1					
12	93430–06024	.CIRCLIP .SEGURO	3					
13	703–48245–00	.PLATE, LOCK .PLACA CERRADURA	1					
14	703–48252–00	.ROLLER, CAM .RODILLO LEVA	1					
15	701–48248–00	.ROLLER, FREE ACCEL. .RODILLO ACELERADOR LIBRE	1					
16	703–48198–00	.WASHER, WAVE .RONDANA ONDULADA 3	1					
17	703–48243–00	.BUSHING .BUJE 3	1					
18	703–48236–00	.BUSHING 1 .BUJE	2					
19	703–48189–00	.RETAINER .RETENEDOR	1					
20	703–48234–00	.ROLLER, DETENT .RODILLO	1					
21	703–48345–01	.CABLE END, REMOTE CONTROL 2 .TERMINAL CABLE DE CONTROL REMO	2					
22	703–48358–01	.ANCHOR, CABLE .ABRAZADERA CABLE	1					
23	703–48244–00	.SPRING, FREE ACCEL. .RESORTE ACELERADOR LIBRE	1					
24	703–48238–00	.SPRING, DETENT .RESORTE	5					
25	703–48211–10	.HOUSING,1 .CAJA	1					
26	703–48212–10	.BACK PLATE 1 .PLACA TRASERA 1	1					

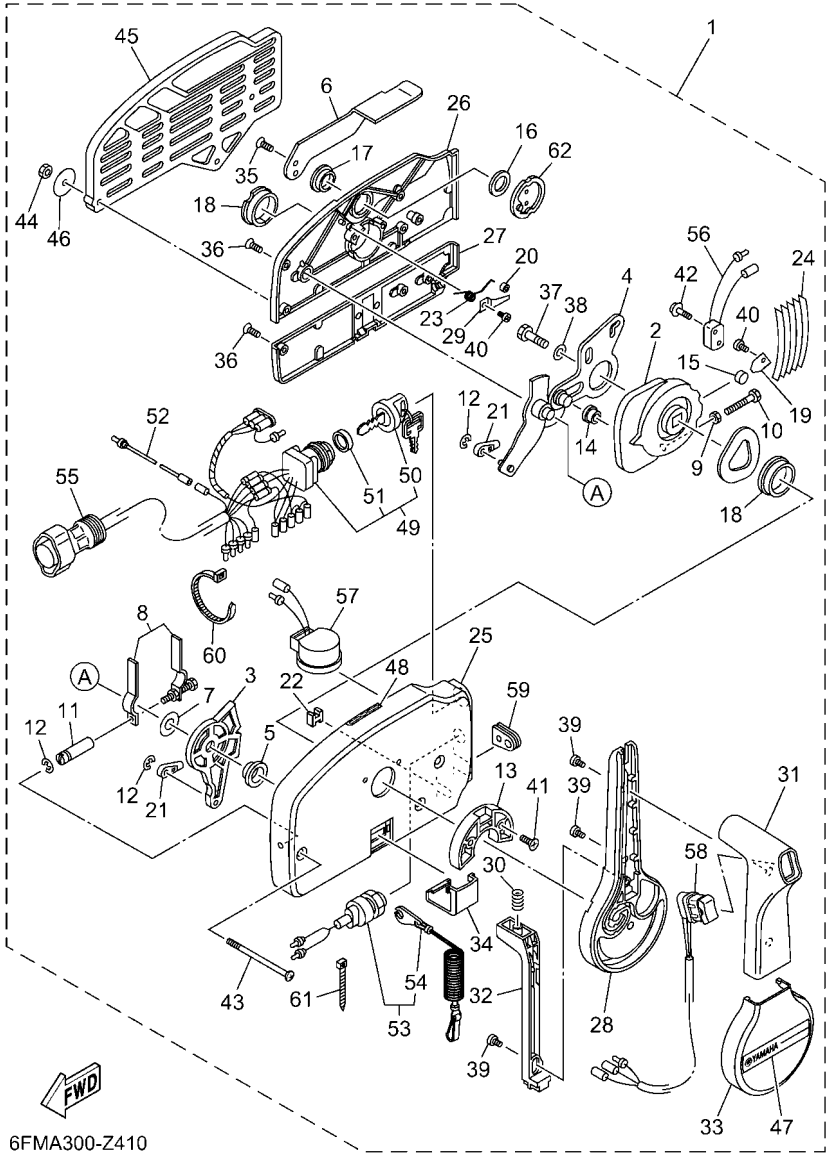

FIG. 41 REMOTE CONTROL ASSY — CONTROL REMOTO COMPL

REF. NO.	PART NO. CODIGO Nº	DESCRIPTION DESCRIPCION	ET	EHT				REMARKS OBSERVACIONES
27	703–48213–10	.BACK PLATE 2 .PLACA TRASERA 2	1					
28	703–48221–10	.LEVER, CONTROL .PALANCA CONTROL	1					
29	703–48246–00	.SPACER .ESPACIADOR	1					
30	703–48227–00	.SPRING, NEUTRAL LOCK .RESORTE DE SEGURO	1					
31	703–48222–20	.GRIP, CONTROL LEVER .MANGO DE PALANCA CONTROL	1					SINGLE SINGLE
32	703–48223–10	.LOCK, NEUTRAL .CERRADURA NEUTRO	1					
33	703–48225–10	.COVER .CUBIERTA	1					
34	703–48219–10	.COVER, LEAD .CUBIERTA	1					
35	703–48281–00	.SCREW .TORNILLO 1	2					
36	703–44189–20	.SCREW .TORNILLO	5					
37	97380–08030	.BOLT .TORNILLO HEXAGONAL	1					
38	92990–08600	.WASHER, PLATE .ARANDELA PLANA	1					
39	703–48128–10	.SCREW 2 .TORNILLO 2	3					
40	98580–04006	.SCREW, PAN HEAD .TORNILLO DE CABEZA CRUZADA	2					
41	703–44189–40	.SCREW .TORNILLO	2					
42	703–48129–00	.SCREW 3 .TORNILLO 3	2					
43	703–44189–30	.SCREW .TORNILLO	3					
44	95380–06600	.NUT, HEXAGON .TUERCA	3					
45	703–48293–11	.SPACER, REMOTE CONTROL .ESPACIADOR	1					SINGLE SINGLE
46	701–48287–00	.WASHER .ARANDELA	3					
47	703–48215–11	.GRAPHIC .CALCOMANIA 1	1					
48	6X3–44191–00	.INDICATOR, SHIFT .INDICADOR DE CAMBIOS	1					
49	703–82510–14	.MAIN SWITCH ASSY .CONJUNTO DE LLAVE IGNICION	1					703-48205-B5 703-48205-B5
	703–82510–45	.MAIN SWITCH ASSY .CONJUNTO DE LLAVE IGNICION	1					703-48205-25 703-48205-25
50	676–82577–01	..CAP, KEY ..TAPA	1					703-82510-14 703-82510-14
	703–82577–00	..CAP, KEY ..TAPA	1					703-82510-45 703-82510-45
51	703–82532–00	..CAP ..TAPA	1					703-82510-14 703-82510-14

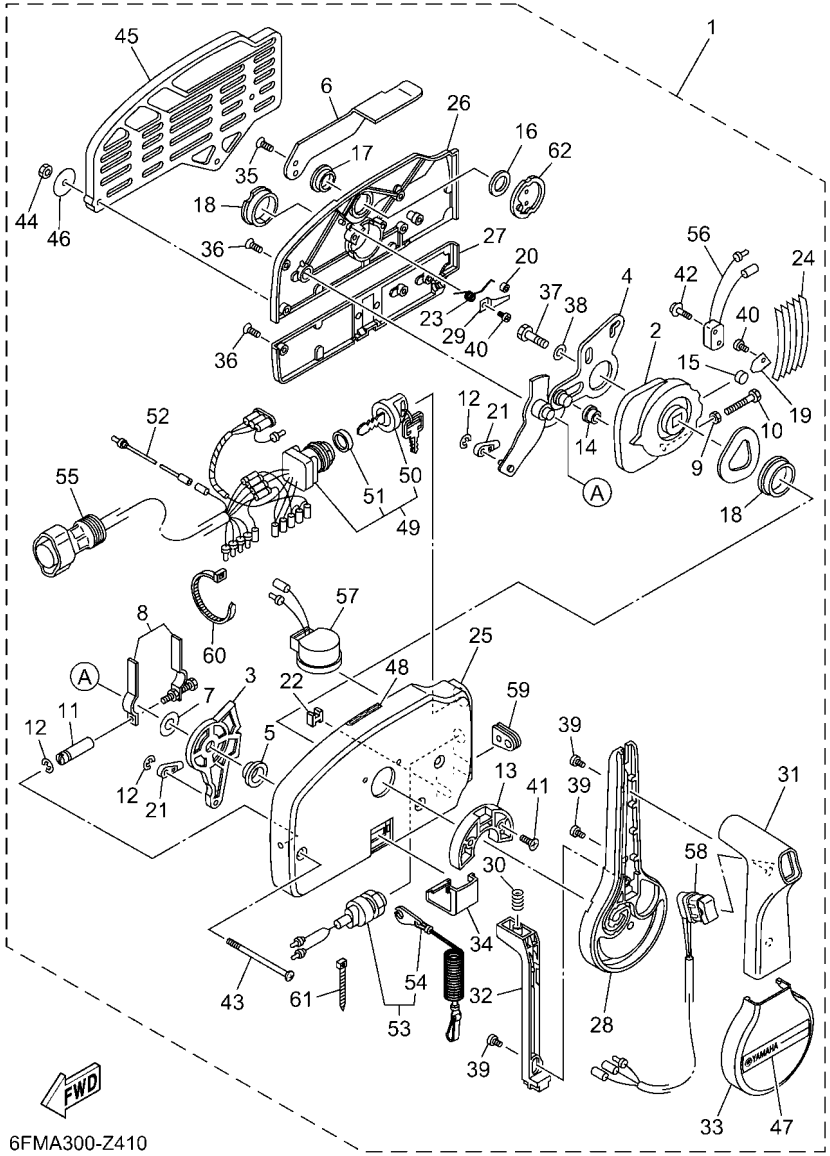

FIG. 41 REMOTE CONTROL ASSY — CONTROL REMOTO COMPL

REF. NO.	PART NO. CODIGO Nº	DESCRIPTION DESCRIPCION	ET	EHT				REMARKS OBSERVACIONES
51	6K1–82532–00	..CAP ..TAPA	1					703-82510-45 703-82510-45
52	703–82531–00	.WIRE, LEAD (L70) .CABLE CONDUCTOR (L70)	1					
53	688–82575–02	.ENGINE STOP SWITCH ASSY .INTERRUPTOR DE PARADA COMPL	1					
54	682–82556–00	..LANYARD, STOP SWITCH ..CORDON DE INTERRUPTOR PARADA	1					
55	688–8258A–20	.EXTENSION, WIRE HARNESS (4.9M) .EXTENSION, ARNES DE CABLES (4.	1					(10P) (10P)
56	703–82540–00	.NEUTRAL SWITCH ASSY .INTERRUPTOR NEUTRAL COMPL	1					
57	703–83383–11	.BUZZER .ZUMBADOR	1					
58	703–82563–31	.TRIM & TILT SWITCH ASSY .INTERRUPTOR DE INCLINACION	1					
59	703–48284–00	.GROMMET .TAPON	1					
60	703–82591–00	.BAND .BANDA	1					
61	703–82592–00	.BAND .BANDA	1					
62	703–48153–00	.SHAFT, FREE ACCEL. .EJE	1					

FIG. 42 METER MEDIDOR

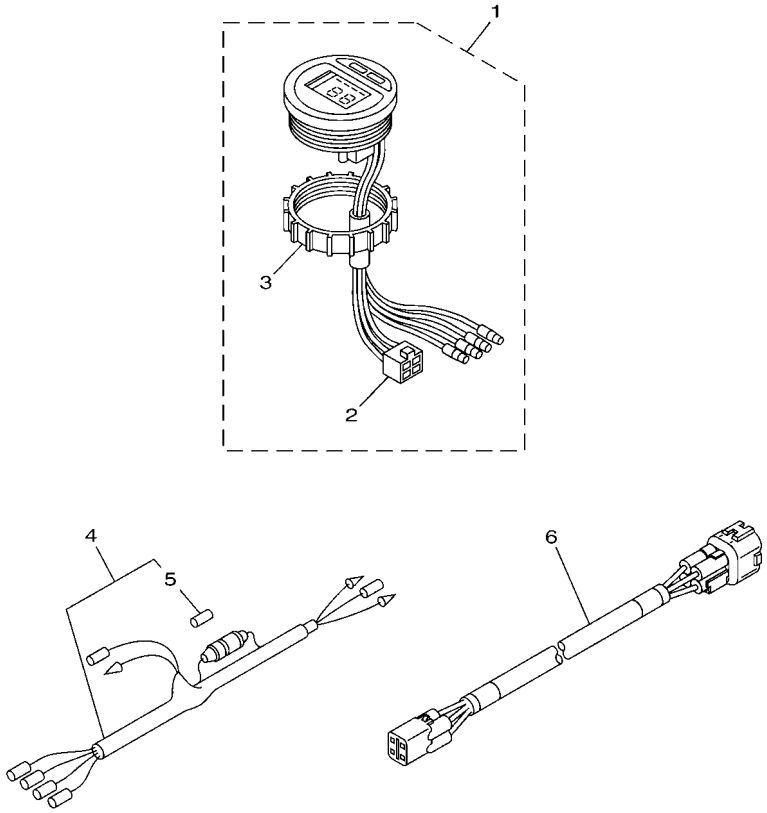

6DA5200-R460

REF. NO.	PART NO. CODIGO Nº	DESCRIPTION DESCRIPCION	ET	EHT				REMARKS OBSERVACIONES
1	6Y5–8350T–E3	TACHOMETER ASSY TACOMETRO COMPLETO	1					AP AP
2	9E450–04533	.CONNECTOR .CONECTOR	1					F-4-W F-4-W
3	6Y8–84383–00	.NUT, RING .TUERCA ANILLO	1					
4	6Y5–83553–01	WIRE, LEAD (L=2.5M) CABLE CONDUCTOR (L=2.5M)	1					AP AP
5	6G1–82151–01	.FUSE (10A) .FUSIBLE (10A)	1					
6	6Y5–83653–20	WIRE, LEAD (L=7.0M) CABLE CONDUCTOR (L=7.0M)	1					AP EXCEPT FOR CHN 4P,7M AP EXCEPT FOR CHN 4P,7M
	6Y5–83653–30	WIRE, LEAD (L=8.0M) CABLE CONDUCTOR (L=8.0M)	1					AP FOR CHN 4P,8M AP FOR CHN 4P,8M

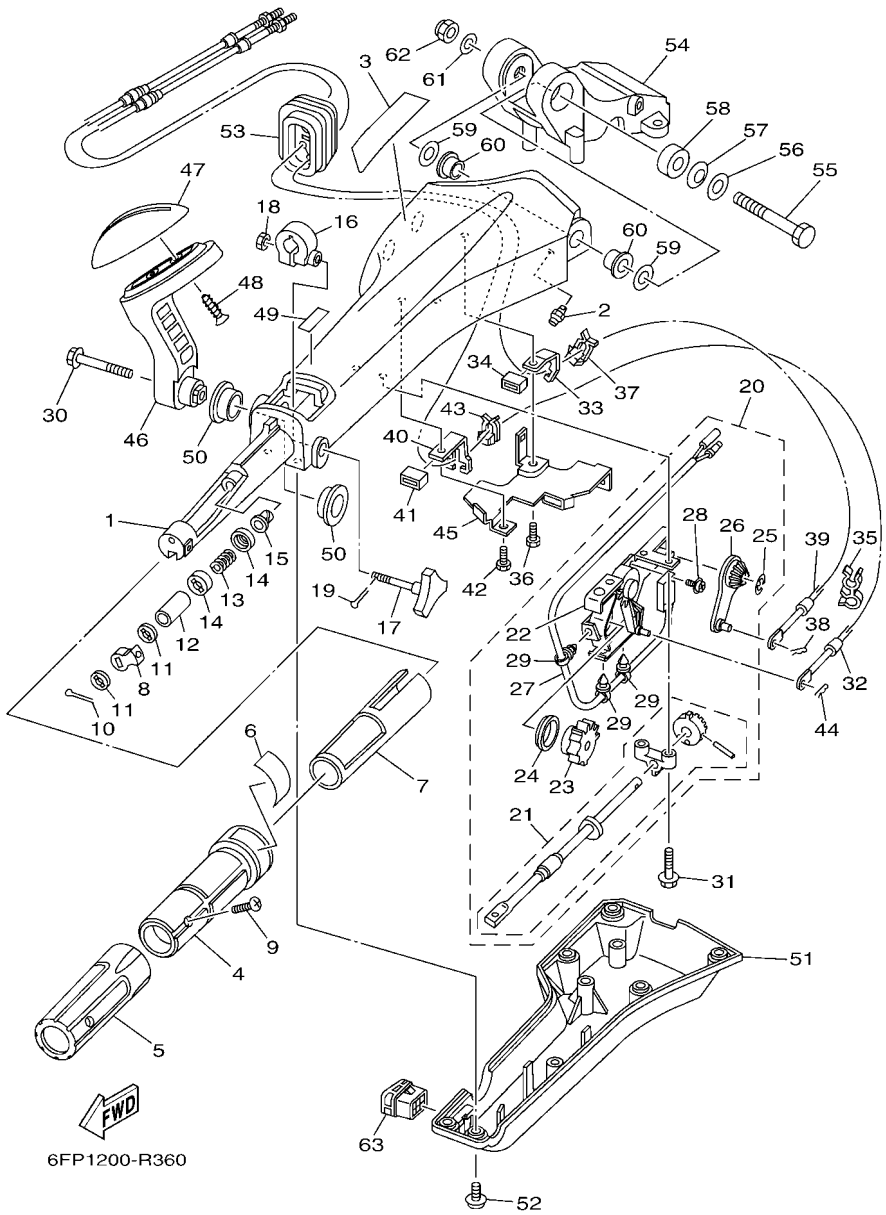

FIG. 43 OPTIONAL PARTS 1 — PARTES OPCIONALES 1

REF. NO.	PART NO. CODIGO Nº	DESCRIPTION DESCRIPCION	ET	EHT				REMARKS OBSERVACIONES
1	6X4–42111–02–8D	HANDLE, STEERING MANIJA DE DIRECCION	1					
2	93700–06002	NIPPLE, GREASE BOQUILLA DE ENGRASAR	1					
3	6X4–48215–00	GRAPHIC CALCOMANIA 1	1					
4	6X4–42119–01	GRIP, STEERING HANDLE MANGO, MANIJA DE DIRRECCION	1					
5	6X4–42177–01	RUBBER, HANDLE HULE DE MANIJA	1					
6	6X4–42137–00	INDICATOR, THROTTLE INDICADOR ACELERADOR	1					
7	6X4–41291–00	BUSHING BUJE	1					
8	6X4–44139–01	COLLAR COLLAR	1					
9	90152–05007	SCREW, COUNTERSUNK TORNILLO EMBUTIDO	1					
10	91490–20010	PIN. COTTER CHAVETA	1					
11	6X4–44177–00	WASHER RONDANA	2					
12	6X4–42128–00	COLLAR, DISTANCE 1 COLLAR DISTANCIADOR 1	1					
13	90501–23215	SPRING, COMPRESSION RESORTE DE COMPRESION	1					
14	6X4–44188–00	WASHER ARANDELLA	2					
15	90386–08032	BUSH BUJE	1					
16	63D–42126–00	FRICTION, STEERING HANDLE GRIP FRICCION DE MANGO DIRECCION	1					
17	6X4–48154–00	KNOB, THROTTLE PERILLA DE ACELERADOR	1					
18	95380–06600	NUT, HEXAGON TUERCA	1					
19	91490–20010	PIN. COTTER CHAVETA	1					
20	6X4–44100–01	SHIFT LINK ASSY ESLABON DE SLECTOR COMPLETO	1					
21	6X4–42115–00	.SHAFT, STEERING HANDLE .EJE MANIJA DE DIRECCION	1					
22	6X4–44102–00	.SHIFT ASSIST ASSY. .SELECTOR DE ASISTIR	1					
23	6X4–47731–01	.GEAR, DRIVE .ENGRANAJE DE TRACCION	1					
24	6X4–44132–00	.BUSHING .BUJE	1					
25	6X4–14137–00	.CLIP .PRESILLA	1					
26	6X4–48261–00	.ARM, THROTTLE .BRAZO ACELERADOR	1					
27	6X4–82540–00	.NEUTRAL SWITCH ASSY .INTERRUPTOR NEUTRAL COMPL	1					

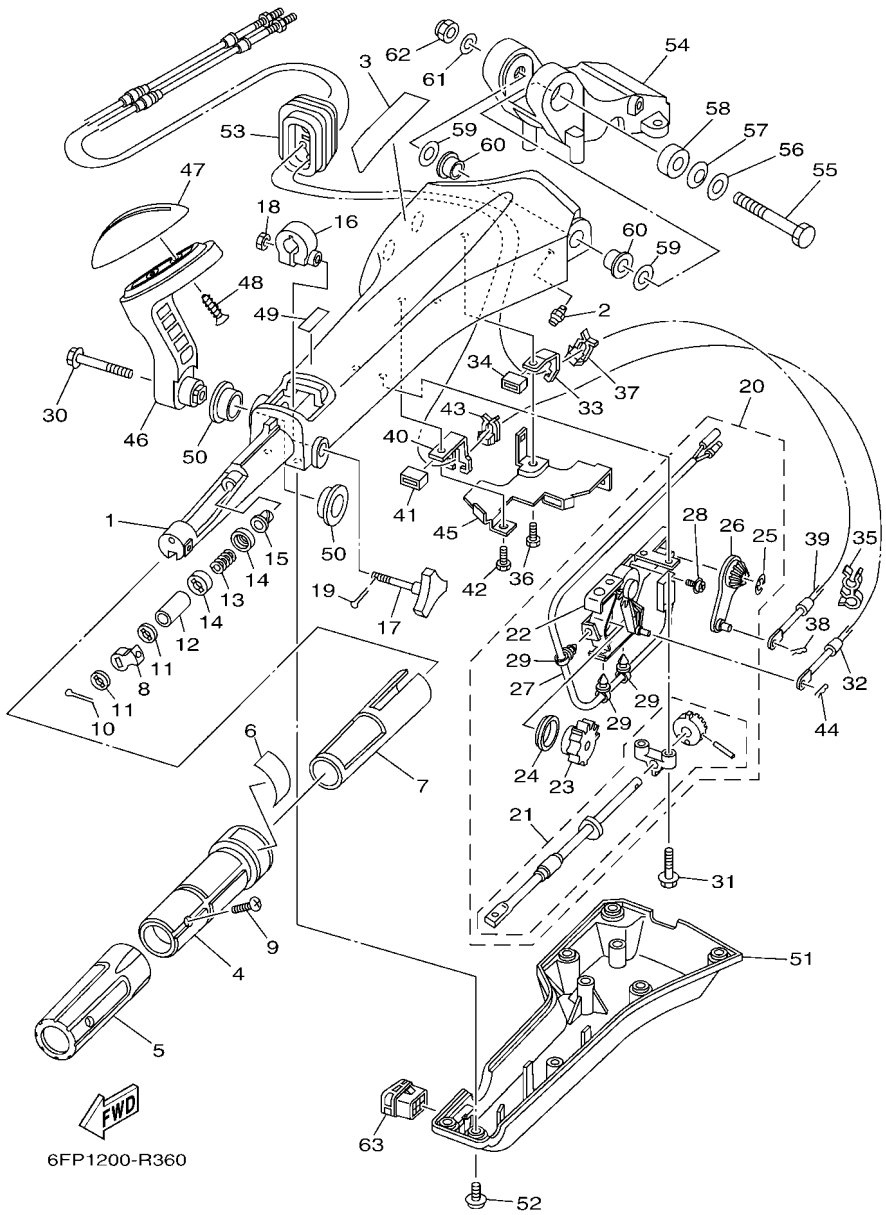

FIG. 43 OPTIONAL PARTS 1 — PARTES OPCIONALES 1

REF. NO.	PART NO. CODIGO Nº	DESCRIPTION DESCRIPCION	ET	EHT				REMARKS OBSERVACIONES
28	703–48129–00	.SCREW 3 .TORNILLO 3	2					
29	6X4–42821–00	.BAND, CLAMP .BRIDA DE CINTA	3					
30	97E95–08540	BOLT, HEXAGON W/W DEEP RECESS TORNILLO HEXAGONAL CON RONDONA	1					
31	97E95–06530	BOLT, HEXAGON W/W DEEP RECESS TORNILLO HEXAGONAL CON RONDONA	2					
32	6EK–48321–00	CABLE CABLE CONTROL REMOTO	1					
33	6X4–48538–00	CLAMP, CABLE 1 GRAMPA DE CABLE	1					
34	6X4–26367–01	PROTECTOR ACCESORIA	1					
35	90464–09M42	CLAMP BRIDA	1					
36	97D95–06014	BOLT, HEXAGON DEEP RECESS TORNILLO HEXAGONAL	1					
37	63D–48538–00	CLAMP, CABLE 1 GRAMPA DE CABLE	1					
38	90468–10005	CLIP PRESILLA	1					
39	6FP–26301–00	THROTTLE CABLE ASSY CABLE DE ACELERADOR COMPLETO	1					
40	6X4–48538–10	CLAMP, CABLE 1 GRAMPA DE CABLE	1					
41	6X4–26367–01	PROTECTOR ACCESORIA	1					
42	97D95–06014	BOLT, HEXAGON DEEP RECESS TORNILLO HEXAGONAL	1					
43	63D–48538–00	CLAMP, CABLE 1 GRAMPA DE CABLE	1					
44	90468–10005	CLIP PRESILLA	1					
45	6X4–42159–00	STAY SOPORTE	1					
46	6X4–44159–A0–8D	HANDLE, GEAR SHIFT MANIJA DE CAMBIO DE MARCHAS	1					
47	6X4–44173–00	LEVER, SHIFT CONTROL PALANCA CONTROL CAMBIOS	1					
48	97780–60920	SCREW, TAPPING TORNILLO DE CABEZA DE CONO ACH	2					
49	6X3–44191–00	INDICATOR, SHIFT INDICADOR DE CAMBIOS	1					
50	90386–26MA3	BUSH BUJE	2					
51	6X4–42131–11	COVER, HANDLE STEERING CUBIERTA MANIJA DIRRECCION	1					
52	97985–06216	SCREW, WITH WASHER TORNILLO, CON ARANDELA	6					
53	6X4–42725–01	GROMMET TAPON	1					
54	63D–42121–22–8D	BRACKET SOPORTE	1					

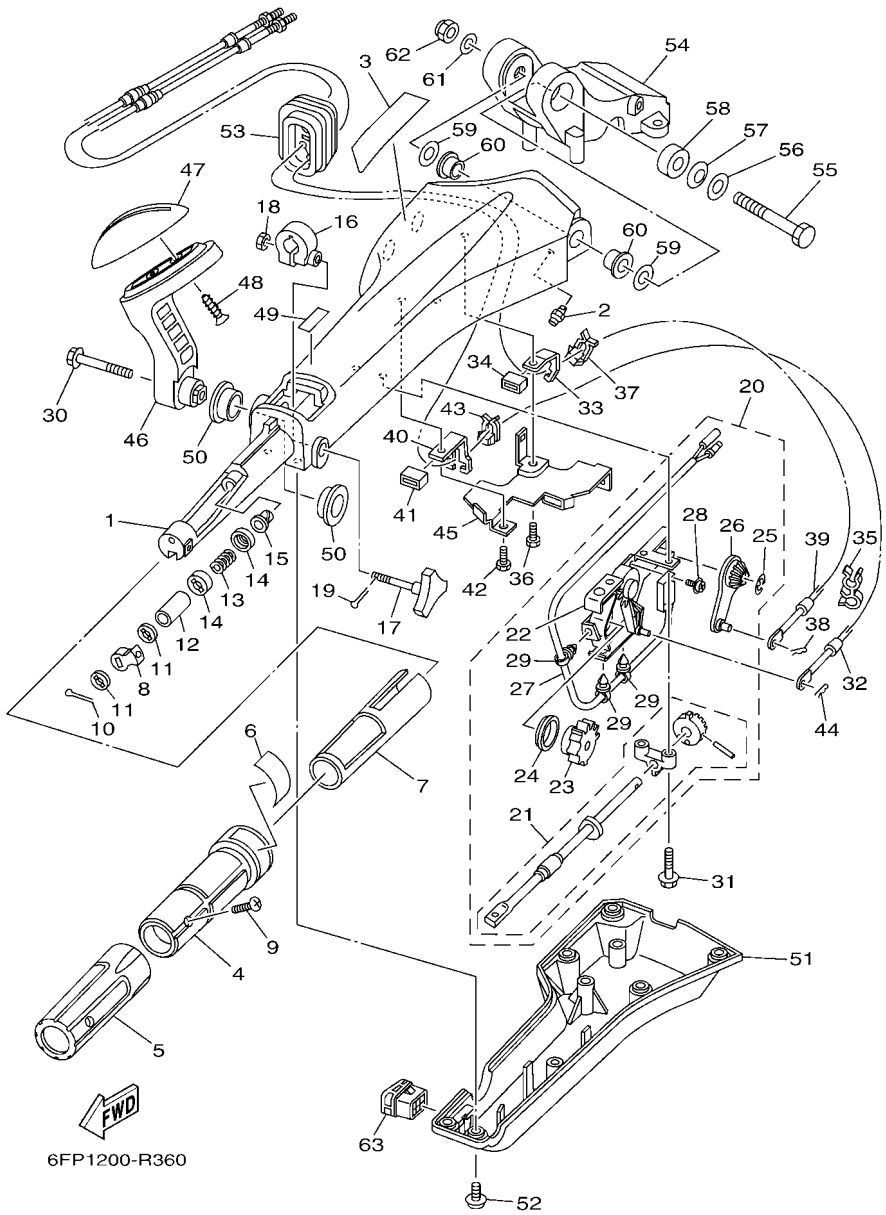

FIG. 43 OPTIONAL PARTS 1 — PARTES OPCIONALES 1

REF. NO.	PART NO. CODIGO Nº	DESCRIPTION DESCRIPCION	ET	EHT				REMARKS OBSERVACIONES
55	90101–12014	BOLT TORNILLO	1					
56	92990–12200	WASHER, PLAIN ARANDELA PLANA	1					
57	90206–12M22	WASHER, WAVE ARANDELA ONDULADA	1					
58	90387–12M02	COLLAR ESPACIADOR	1					
59	90201–12035	WASHER, PLATE ARANDELA PLANA	2					
60	90386–12003	BUSH BUJE	2					
61	92990–12600	WASHER, PLATE ARANDELA PLANA	1					
62	90185–12M12	NUT, SELF-LOCKING TUERCA AUTOBLOCANTE	1					
63	6X4–42728–10	CAP TAPA	1					

FIG. 44 OPTIONAL PARTS 2 — PARTES OPCIONALES 2

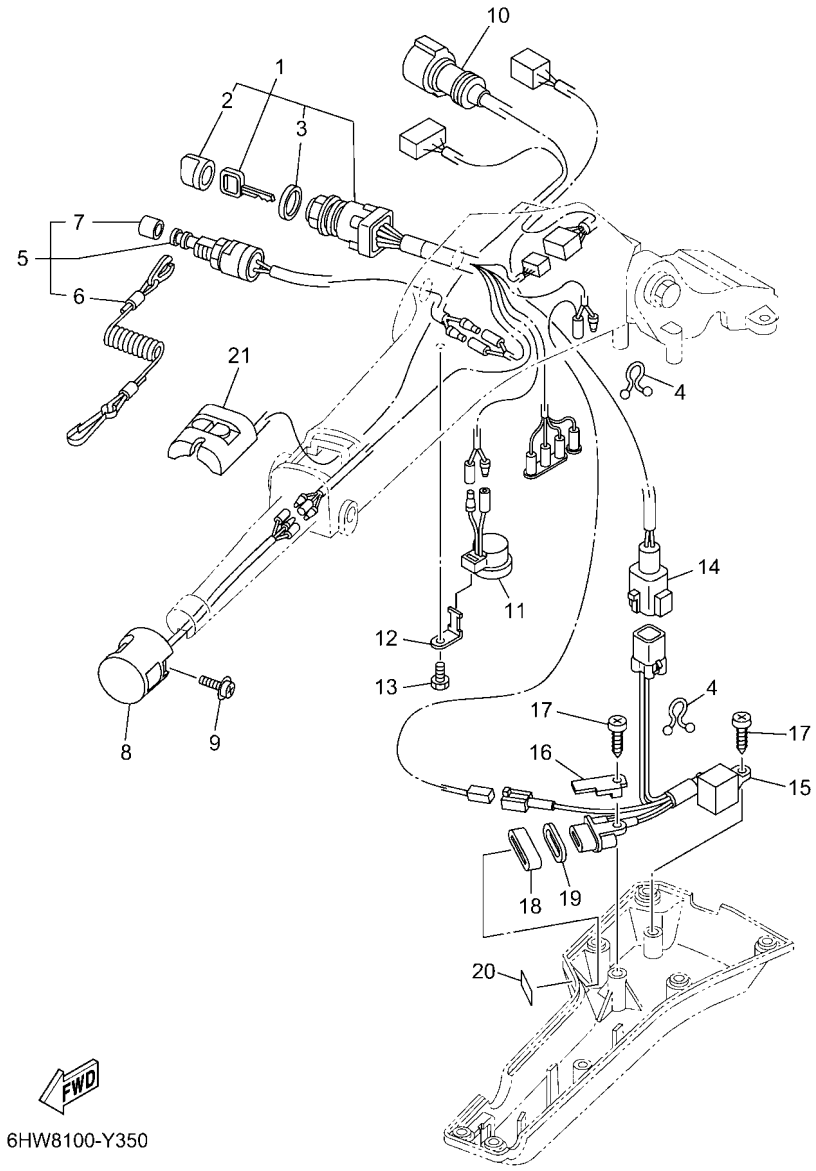

6HW8100-Y350

REF. NO.	PART NO. CODIGO Nº	DESCRIPTION DESCRIPCION	ET	EHT				REMARKS OBSERVACIONES
1	6X4–82510–42	MAIN SWITCH ASSY CONJUNTO DE LLAVE IGNICION	1					
2	676–82577–01	.CAP, KEY .TAPA	1					
3	703–82532–00	.CAP .TAPA	1					
4	90464–08M07	CLAMP BRIDA	2					
5	69W–82575–00	ENGINE STOP SWITCH ASSY INTERRUPTOR DE PARADA COMPL	1					
6	682–82556–00	.LANYARD, STOP SWITCH .CORDON DE INTERRUPTOR PARADA	1					
7	689–8257Y–00	.CAP .TAPA	1					
8	6X4–82563–01	TRIM & TILT SWITCH ASSY INTERRUPTOR DE INCLINACION	1					
9	97980–06216	SCREW, WITH WASHER TORNILLO, CON ARANDELA	1					
10	6X4–82586–11	EXT., WIRE HARNESS (L:950MM) EXT, CONJ. DE CABLES (L:950MM)	1					
11	6X4–83383–00	BUZZER ZUMBADOR	1					
12	6X4–83386–00	STAY, BUZZER TIRANTE DE ZUMBADOR	1					
13	97D95–06014	BOLT, HEXAGON DEEP RECESS TORNILLO HEXAGONAL	1					
14	6X4–83653–20	WIRE, LEAD (L:700MM) CABLE CONDUCTOR (L:700MM)	1					
15	6C5–84301–10	PILOT LIGHT ASSY 1 LUZ PILOTO COMPLETA 1	1					
16	6X4–44114–00	STOPPER RETEN	1					
17	97780–60620	SCREW, TAPPING TORNILLO DE CABEZA DE CONO ACH	2					
18	6X4–42727–01	GROMMET TAPON	1					
19	6FM–83589–00	GASKET EMPAQUE	1					
20	6X4–85415–00	MARK, SIGNAL LAMP MARCO DE FOCO DE SENAL	1					
21	6X4–81860–00	SWITCH ASSY INTERRUPTOR COMPL	1					

FIG. 45 OPTIONAL PARTS 3 — PARTES OPCIONALES 3

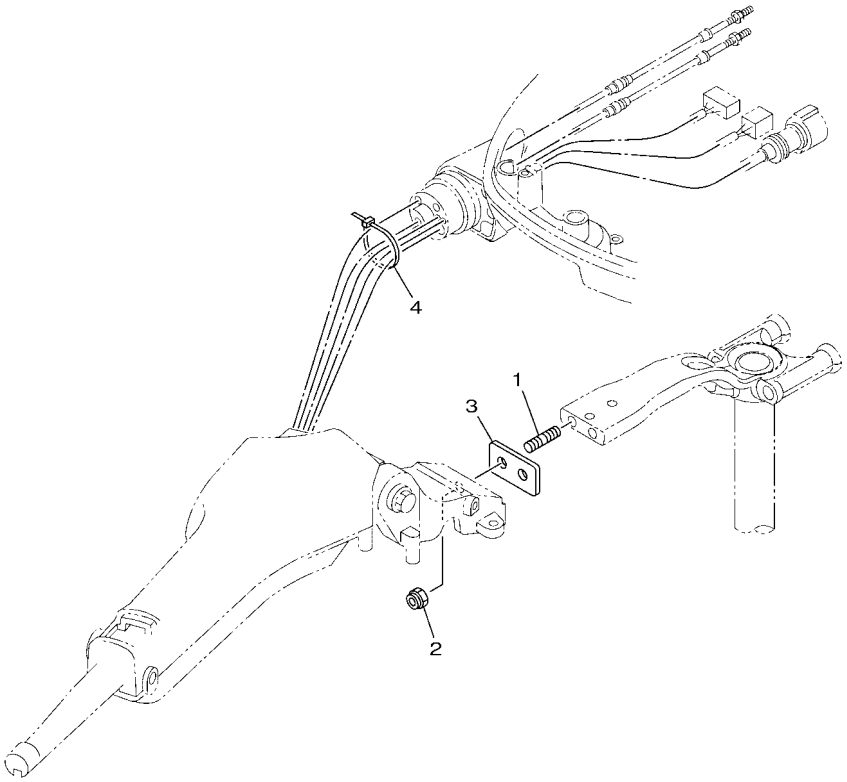

6FP1200-R380

REF. NO.	PART NO. CODIGO Nº	DESCRIPTION DESCRIPCION	ET	EHT				REMARKS OBSERVACIONES
1	90116–10063	BOLT, STUD ESPARRAGO	2					
2	90185–10027	NUT, SELF-LOCKING TUERCA AUTOBLOCANTE	2					
3	6EK–42121–00	BRACKET SOPORTE	1					
4	90465–13M24	CLAMP BRIDA	1					

FIG. 46 OPTIONAL PARTS 4 — PARTES OPCIONALES 4

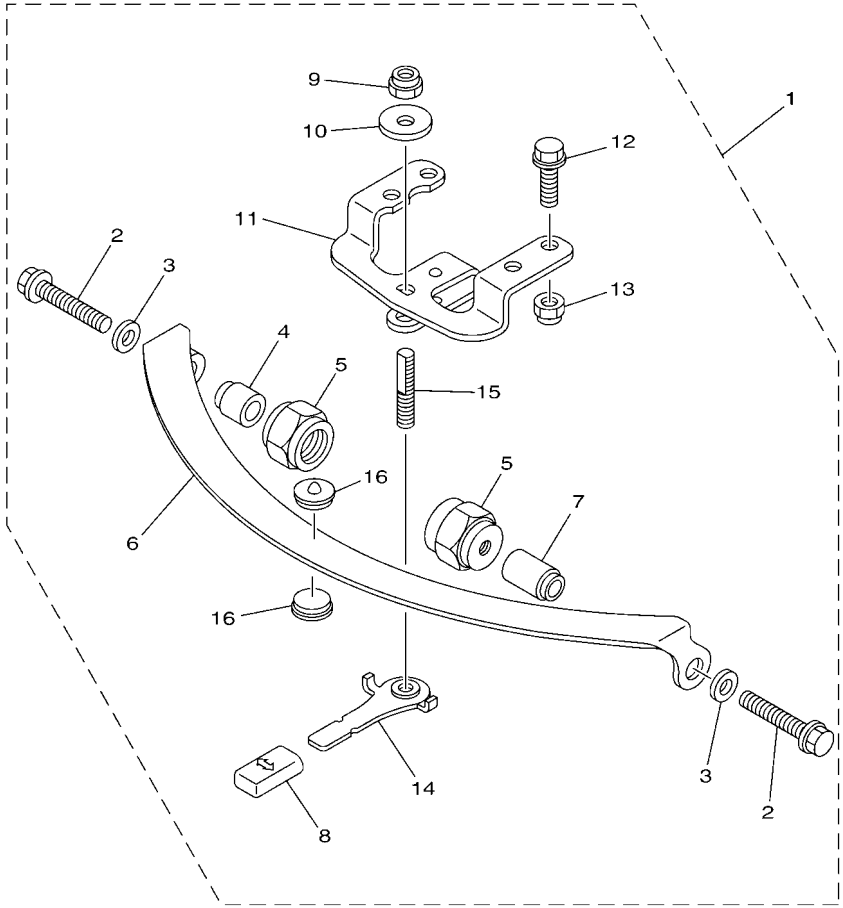

6FP1200-R390

REF. NO.	PART NO. CODIGO Nº	DESCRIPTION DESCRIPCION	ET	EHT				REMARKS OBSERVACIONES
1	67G–42508–12	STEERING FRICTION ASSY DIRECCION FRICCION COMP.	1					
2	90119–08193	.BOLT, WITH WASHER .TORNILLO CON ARANDELA	2					
3	90201–08M01	.WASHER, PLATE .ARANDELA PLANA	2					
4	67G–42541–00	.PIPE 1 .TUBO 1	1					
5	67G–42546–00	.NUT .TUERCA	2					
6	63D–42527–00	.PLATE, FRICTION .PLACA DE FRICCION	1					
7	67G–42541–10	.PIPE 1 .TUBO 1	1					
8	682–43318–01	.COVER .CUBIERTA	1					
9	90185–10M14	.NUT, SELF-LOCKING .TUERCA AUTOBLOCANTE	1					
10	90201–10M76	.WASHER, PLATE .ARANDELA PLANA	1					
11	6X4–42526–00	.PLATE, FRICTION .PLACA DE FRICCION	1					
12	97E95–08525	.BOLT, HEXAGON W/W DEEP RECESS .TORNILLO HEXAGONAL CON RONDONA	2					
13	90185–08057	.NUT, SELF-LOCKING .TUERCA AUTOBLOCANTE	2					
14	67G–42561–00	.KNOB, STEERING LOCK .PERILLA	1					
15	67G–42562–00	.SHAFT, STEERING LOCK .EJE,CERRADURA DE DIRECCION	1					
16	63D–42528–00	.PLATE, FRICTION .PIEZA DE FRICCION	2					

FIG. 47 OPTIONAL PARTS 5 — PARTES OPCIONLES 5

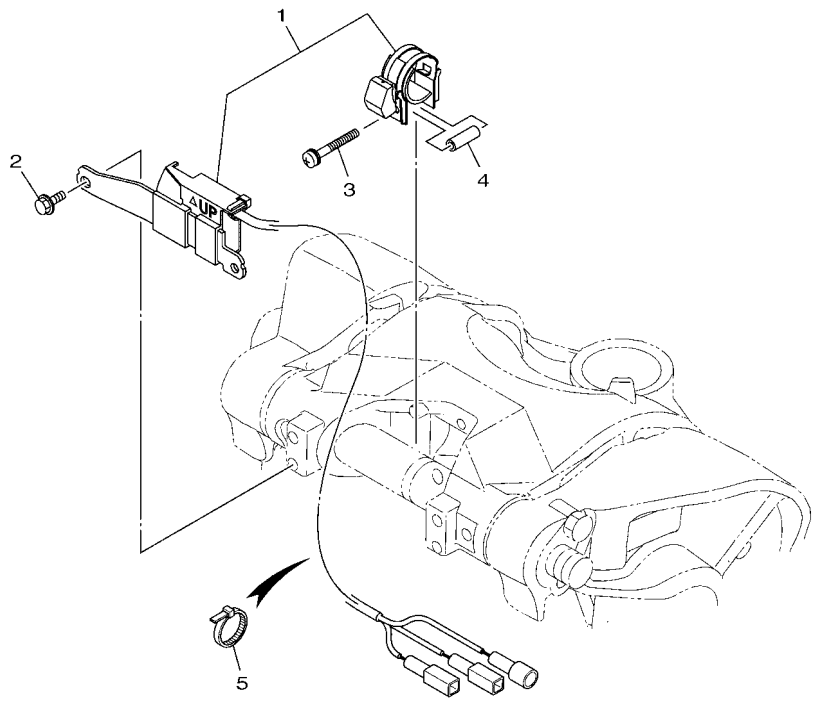

6EK3100-Q390

REF. NO.	PART NO. CODIGO Nº	DESCRIPTION DESCRIPCION	ET	EHT				REMARKS OBSERVACIONES
1	63P–825E0–02	TILT LIMIT SWITCH ASSY INTERRUPTOR DE LIMITE	1					
2	97E95–06516	BOLT, HEXAGON W/W DEEP RECESS TORNILLO HEXAGONAL CON RONDONA	2					
3	90159–05059	SCREW, WITH WASHER TORNILLO CON VALONA	1					
4	90387–05004	COLLAR ESPACIADOR	1					
5	90465–11M10	CLAMP BRIDA	5					

FIG. 48 REPAIR KIT 1 — ESTUCHE REPARATION 1

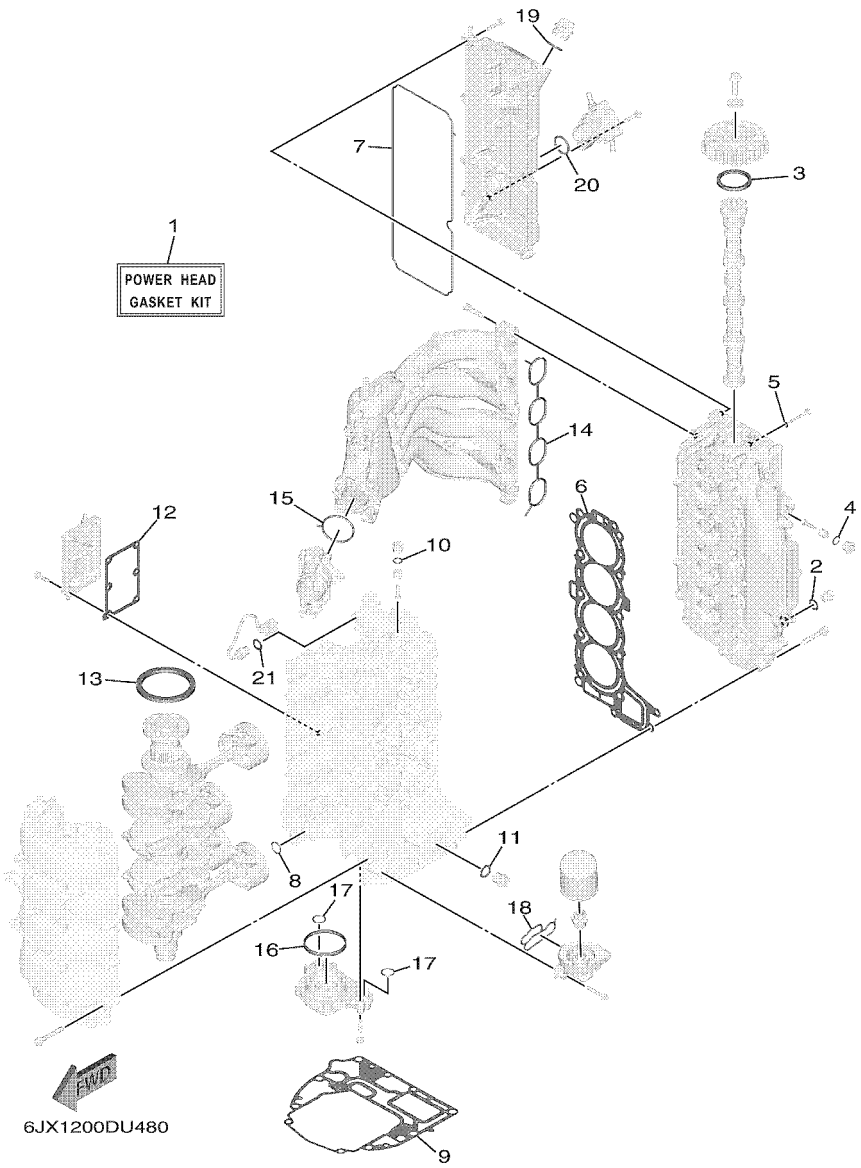

REF. NO.	PART NO. CODIGO Nº	DESCRIPTION DESCRIPCION	ET	EHT				REMARKS OBSERVACIONES
1	6FP–W0001–01	POWER HEAD GASKET KIT JUEGO DE EMPAQUE DE MOTOR	1	1				
2	90430–14115	.GASKET .JUNTA	1	1				
3	93102–48017	.OIL SEAL .SELLO ACEITE	1	1				
4	93210–13M63	.O-RING .ANILLO O	2	2				
5	90430–06014	.GASKET .JUNTA	1	1				
6	6FP–11181–00	.GASKET, CYLINDER HEAD 1 .JUNTA, DE CULATA 1	1	1				
7	6FP–11193–00	.GASKET, HEAD COVER 1 .EMPAQUE	1	1				
8	93210–19MJ1	.O-RING .ANILLO O	1	1				
9	6EK–11351–01	.GASKET, CYLINDER .JUNTA, DE CILINDRO	1	1				
10	93210–13M63	.O-RING .ANILLO O	1	1				
11	90201–186F1	.WASHER, PLATE .ARANDELA PLANA	1	1				
12	6FP–15353–00	.GASKET, DRAIN .JUNTA DE DRENAJE	1	1				
13	93102–85008	.OIL SEAL .SELLO ACEITE	1	1				
14	6FP–13645–00	.GASKET, MANIFOLD 1 .EMPAQUE	1	1				
15	6FP–13646–00	.GASKET, MANIFOLD 2 .EMPAQ. DE MULTIPLE 2	1	1				
16	69J–11355–00	.SEAL, CYLINDER 1 .RETEN ACEITE CILINDRO 1	1	1				
17	93210–19MJ1	.O-RING .ANILLO O	2	2				
18	6FP–13475–00	.GASKET .EMPAQUE	1	1				
19	93210–24M79	.O-RING .ANILLO O	1	1				
20	93210–30682	.O-RING .ANILLO O	1	1				
21	90430–14115	.GASKET .JUNTA	1	1				

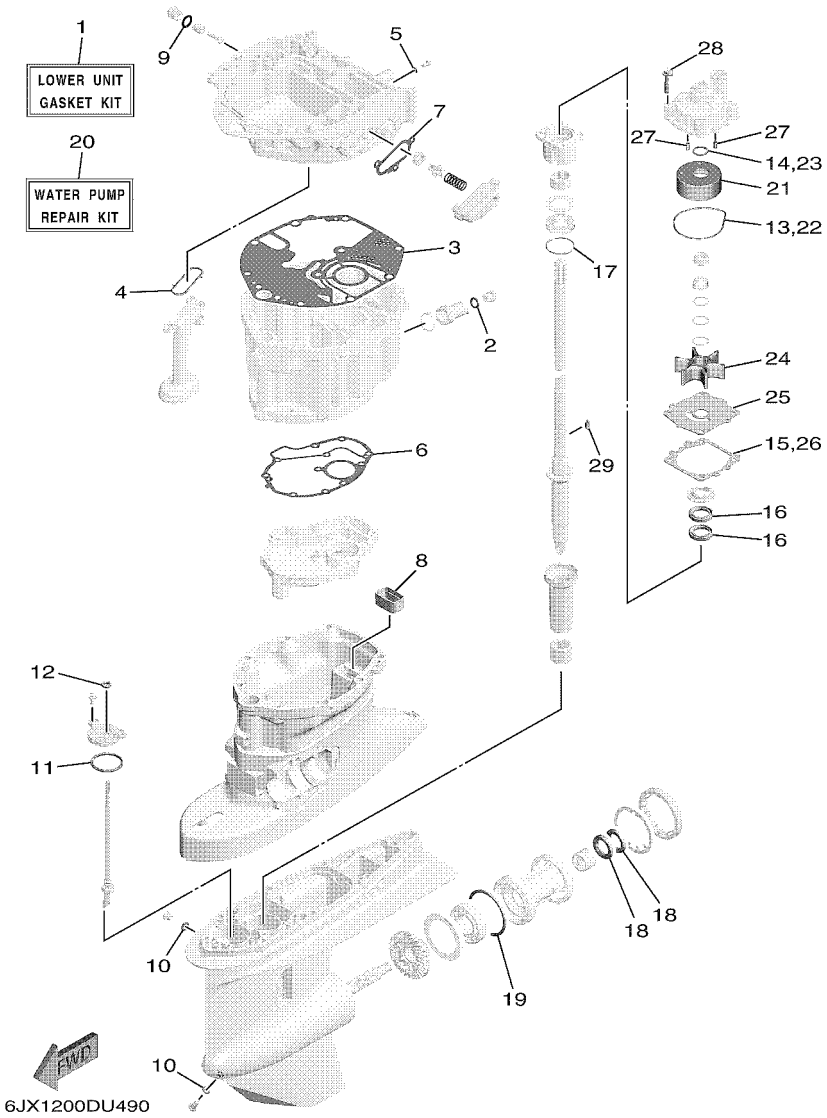

FIG. 49 REPAIR KIT 2 — ESTUCHE REPARATION 2

REF. NO.	PART NO. CODIGO Nº	DESCRIPTION DESCRIPCION	ET	EHT				REMARKS OBSERVACIONES
1	6EK–W0001–21	LOWER UNIT GASKET KIT JUEGO DE EMPAQUE UNIDAD INFER.	1	1				
2	90430–14M09	.GASKET .JUNTA	1	1				
3	6EK–15312–01	.GASKET, OIL PAN .EMPAQ BANDEJA DE ACEITE	1	1				
4	67F–13415–00	.SEAL, OIL STRAINER .SELLO COLADOR ACEITE	1	1				
5	90430–08143	.GASKET .JUNTA	1	1				
6	6EK–41134–00	.GASKET, EXHAUST MANIFOLD .EMPAQUE	1	1				
7	6EK–12435–A0	.GASKET .EMPAQUE	1	1				
8	67F–45127–00	.SEAL .SELLO DE GOMA	1	1				
9	93210–13M63	.O-RING .ANILLO O	1	1				
10	90430–08003	.GASKET .JUNTA	2	2				
11	93210–58144	.O-RING .ANILLO O	1	1				
12	93106–09014	.OIL SEAL .SELLO ACEITE	1	1				
13	93210–86M38	.O-RING .ANILLO O	1	1				
14	93210–37160	.O-RING .ANILLO O	1	1				
15	6E5–44315–A0	.GASKET, WATER PUMP .EMPAQUE	1	1				
16	93101–28M16	.OIL SEAL .SELLO ACEITE	2	2				
17	93210–55M14	.O-RING .ANILLO O	1	1				
18	93101–30M17	.OIL SEAL .SELLO ACEITE	2	2				
19	93210–86M39	.O-RING .ANILLO O	1	1				
20	60C–W0078–01	WATER PUMP REPAIR KIT ESTUCHE REPARACION BOMBA AGUA	1	1				
21	6R3–44322–42	.INSERT, CARTRIDGE .CARTUCHO	1	1				
22	93210–86M38	.O-RING .ANILLO O	1	1				
23	93210–37160	.O-RING .ANILLO O	1	1				
24	6E5–44352–01	.IMPELLER .IMPULSOR	1	1				
25	60C–44323–40	.OUTER PLATE, CARTRIDGE .PLACA EXTERIOR DEL CARTUCHO	1	1				
26	6E5–44315–A0	.GASKET, WATER PUMP .EMPAQUE	1	1				
27	93606–12019	.PIN, DOWEL .PASADOR DE CLAVIJA	2	2				

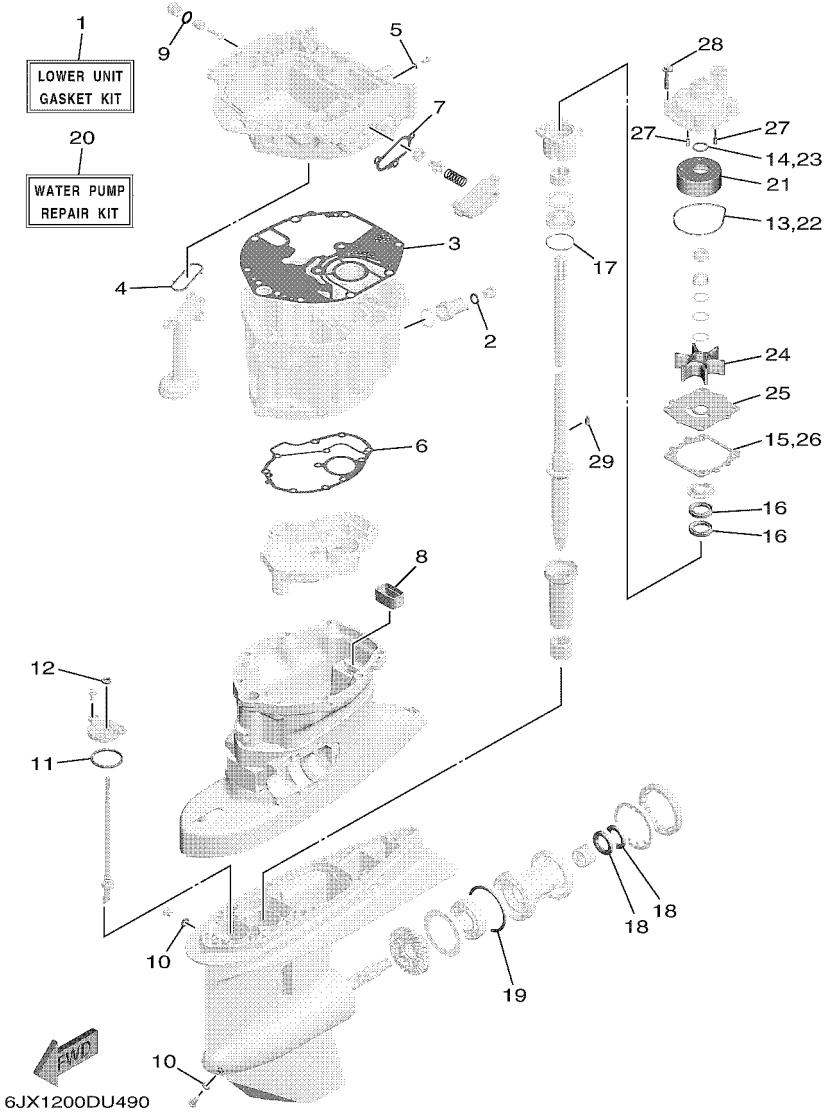

FIG. 49 REPAIR KIT 2 — ESTUCHE REPARATION 2

REF. NO.	PART NO. CODIGO Nº	DESCRIPTION DESCRIPCION	ET	EHT				REMARKS OBSERVACIONES
28	90119–08191	.BOLT, WITH WASHER .TORNILLO CON ARANDELA	4	4				
29	90280–04M05	.KEY, WOODRUFF .CUNA WOODRUFF	1	1				

NUMERICAL INDEX
INDICE NUMERICO

PART NO. CODIGO Nº	REF. NO.
6FP–11119–00	3 – 20
6DA–11133–10	5 – 3
6FP–11168–00	5 – 23
6FP–11181–00	5 – 17
	48 – 6
6FP–11191–00	5 – 22
6FP–11192–00	5 – 27
6FP–11193–00	5 – 25
	48 – 7
6G8–11197–A0	3 – 18
	5 – 13
	32 – 30
6EK–11313–00	3 – 3
6G8–11325–00	1 – 1
	1 – 4
	1 – 14
	3 – 16
	5 – 11
	32 – 28
63P–11325–01	1 – 2
	3 – 26
63P–11325–21	1 – 7
	10 – 8
6EK–11351–01	3 – 15
	48 – 9
69J–11355–00	33 – 14
	48 – 16
6EK–11410–01	4 – 1
6EK–11416–00	4 – 5
6EK–11416–10	4 – 5
6EK–11416–20	4 – 5
6EK–11416–30	4 – 5
6EK–11416–40	4 – 5
6EK–11417–00	4 – 6
6EK–11417–10	4 – 6
6EK–11417–20	4 – 6
6EK–11417–30	4 – 6
6EK–11417–40	4 – 6
6EK–11426–01	4 – 7
6EK–11427–00	4 – 8
6CB–11478–00	4 – 2
6FP–11537–00	6 – 22
6DA–11557–00	6 – 23
6EK–11603–01	4 – 12
6EK–11604–01	4 – 12
6FP–11631–01	4 – 11
6EK–11633–00	4 – 13
6FP–11635–01	4 – 11

PART NO. CODIGO Nº	REF. NO.
6EK–11656–00	4 – 15
6EK–11656–10	4 – 15
6EK–11656–20	4 – 15
6EK–11656–30	4 – 15
6EK–11656–40	4 – 15
6JX–12111–00	6 – 1
6FP–12113–00	6 – 4
62Y–12116–00	6 – 3
30X–12117–00	6 – 5
30X–12118–00	6 – 6
51Y–12119–00	6 – 7
6FP–12121–00	6 – 2
6FP–12146–00	6 – 8
6FP–12151–00	6 – 9
6C5–12158–00	6 – 11
6C5–12158–10	6 – 14
	6 – 30
6C5–12159–00	6 – 10
6C5–12159–10	6 – 13
	6 – 29
6FP–12161–00	6 – 12
6FP–12162–10	6 – 28
6FP–12171–00	6 – 20
6FP–12231–00	6 – 15
6FP–12233–00	6 – 16
6FP–12411–00	1 – 5
	3 – 9
6EK–12412–00	3 – 10
6EK–12413–00	3 – 11
6G5–12416–00	32 – 19
6EK–12435–A0	32 – 23
	49 – 7
6EK–1243A–00	3 – 13
6EK–1246A–00–9S	32 – 22
6FP–12483–00	3 – 30
6FP–12484–00	3 – 31
6FP–12485–00	3 – 35
6AW–12572–00	22 – 5
6R3–12581–00	22 – 7
6R3–12582–00	22 – 8
6R3–12583–00	22 – 9
6AW–13119–00	33 – 12
68V–13131–00	12 – 17
6FP–13132–00	10 – 21
6FP–13161–00	9 – 1
6EK–13300–00	33 – 10
6EK–13329–00	33 – 11
6FP–13371–00	7 – 19

PART NO. CODIGO Nº	REF. NO.
6FP–13381–00	7 – 10
67F–13411–00	33 – 7
67F–13415–00	33 – 9
	49 – 4
6CJ–13428–00	5 – 29
6EK–13437–62	13 – 16
5GH–13440–72	1 – 3
	3 – 38
6FP–13446–00	3 – 40
6CB–13473–00	3 – 37
6FP–13475–00	3 – 41
	48 – 18
6FP–13476–00	7 – 9
6EK–13490–00	3 – 36
6FP–13545–00	11 – 6
6AW–13545–10	8 – 13
6FP–13546–00	8 – 15
	11 – 7
6FP–13547–00	8 – 16
6FP–13548–00	8 – 17
6FP–13577–00	9 – 4
6FP–13593–01	10 – 23
69J–13631–00	33 – 13
6FP–13641–00	7 – 1
6FP–13645–00	7 – 2
	48 – 14
6FP–13646–00	7 – 3
	48 – 15
6C5–13713–02	7 – 8
6FP–13716–00	10 – 22
6FP–13751–01	7 – 4
6FP–13761–01	9 – 2
6C5–13781–00	10 – 20
6FP–13906–00	10 – 18
6FP–13907–01	10 – 12
6FP–13910–01	10 – 11
6FP–13915–00	1 – 8
	10 – 16
6FP–13927–00	10 – 17
6FP–13938–00	10 – 14
6FP–13972–00	11 – 3
6FP–13974–01	11 – 1
6C5–1410B–00	9 – 3
6C5–14127–10	10 – 15
6BG–14137–00	10 – 13
6X4–14137–00	23 – 25
	43 – 25
6BG–14149–00	11 – 12

PART NO. CODIGO Nº	REF. NO.
6FP–14180–03	10 – 1
6FP–14182–01	10 – 10
6C5–14191–00	10 – 6
6C5–14397–00	10 – 7
6FP–14435–00	7 – 20
6HV–14440–01	7 – 23
6FP–14440–02	7 – 23
6C5–14496–00	7 – 14
6C5–14567–00	10 – 25
6FP–14591–00	10 – 5
6FP–1475A–00	8 – 5
6FP–1475F–00	8 – 20
6FP–1475G–00	8 – 22
6FP–14960–00	10 – 2
6FP–14984–00	1 – 9
	10 – 24
6EK–14989–00	8 – 21
6FP–15109–10–9S	3 – 2
6EK–15311–02–CA	33 – 1
6EK–15312–01	33 – 6
	49 – 3
6EK–15316–00	33 – 18
6FP–15353–00	3 – 28
	48 – 12
6FP–15362–00	33 – 17
6G8–15363–00	5 – 31
6FP–15373–00	7 – 22
6FP–15414–00–9S	3 – 25
6FP–21337–00	11 – 13
6FP–2134X–00	8 – 8
63D–21744–00	8 – 19
6E5–21744–00	8 – 18
6EK–22434–00	30 – 23
6EK–22471–01	30 – 18
68V–24149–00	12 – 25
6YJ–24167–00	36 – 7
	38 – 7
6FP–2416A–00	8 – 4
69J–24170–00	8 – 7
6FP–2419E–01	8 – 9
6YJ–24201–21	36 – 1
6YJ–24201–31	38 – 1
6YK–24201–44	37 – 1
6C5–24251–01	1 – 10
	11 – 4
6YJ–24260–11	36 – 3
6Y1–24260–30	38 – 3
6Y1–24268–01	36 – 6

PART NO. CODIGO Nº	REF. NO.
6Y1–24268–01	38 – 6
6Y2–24305–06	36 – 13
	37 – 4
	38 – 13
6Y2–24306–46	36 – 8
	38 – 8
6FP–24311–00	12 – 13
6JX–24311–00	12 – 13
6FP–24314–00	12 – 3
6JX–24314–00	12 – 3
6FP–24324–00	11 – 10
6FP–24325–00	11 – 11
6Y1–24329–00	36 – 5
	38 – 5
6FP–24330–00	11 – 2
6E5–24351–51	12 – 4
	36 – 10
	38 – 10
6Y2–24360–60	36 – 12
	38 – 12
6YK–24360–73	37 – 3
68V–24374–00	12 – 20
6AW–24377–01	12 – 2
688–24378–00	3 – 33
	8 – 14
6FP–24379–00	11 – 8
6BG–24387–00	11 – 5
6FP–24410–00	12 – 14
68V–24411–00	12 – 19
68V–24412–00	12 – 15
6FP–24413–00	12 – 21
6FP–24414–00	12 – 23
6FP–24422–00	9 – 6
63P–24423–00	12 – 18
68V–24444–00	12 – 24
6FP–24444–00	10 – 9
6FP–24452–00	10 – 3
68V–24454–00	12 – 16
6FP–24462–00	10 – 4
6D8–24469–00	12 – 9
68V–24471–10	12 – 22
6D8–24519–00	12 – 10
6EK–24560–00	12 – 5
6D8–24562–00	12 – 8
6D8–24563–00	1 – 11
	12 – 6
6D8–24564–00	1 – 12
	12 – 7

PART NO. CODIGO Nº	REF. NO.
6FP–24568–01	12 – 12
6YJ–24610–01	36 – 2
	38 – 2
6YL–24610–10	37 – 2
6FP–26301–00	23 – 39
	43 – 39
6X4–26367–01	23 – 34
	23 – 41
	43 – 34
	43 – 41
67F–28100–03	12 – 29
67F–28100–12	12 – 29
6CB–2812A–00	14 – 15
6EK–41134–00	32 – 9
	49 – 6
6EK–41137–02–CA	32 – 1
6FP–41211–00	27 – 40
6FP–41213–00	27 – 36
682–41237–00	27 – 42
6X4–41291–00	23 – 7
	43 – 7
6FP–41662–00	27 – 32
6X4–42111–02–8D	23 – 1
	43 – 1
6X4–42115–00	23 – 21
	43 – 21
6X4–42119–01	23 – 4
	43 – 4
6EK–42121–00	25 – 1
	45 – 3
63D–42121–22–8D	23 – 54
	43 – 54
63D–42126–00	23 – 16
	43 – 16
6X4–42128–00	23 – 12
	43 – 12
6X4–42131–11	23 – 51
	43 – 51
6X4–42137–00	23 – 6
	43 – 6
6FP–42154–00	27 – 30
6X4–42159–00	23 – 45
	43 – 45
68V–42171–00	27 – 31
6X4–42177–01	23 – 5
	43 – 5
6BG–42384–00	22 – 2
67G–42508–12	26 – 1

NUMERICAL INDEX
INDICE NUMERICO

PART NO. CODIGO Nº	REF. NO.
67G–42508–12	46 – 1
6EK–42510–00–8D	29 – 6
6EK–42510–10–8D	29 – 6
6X4–42526–00	26 – 11
	46 – 11
63D–42527–00	26 – 6
	46 – 6
63D–42528–00	26 – 16
	46 – 16
67G–42541–00	26 – 4
	46 – 4
6EK–42541–00	22 – 10
67G–42541–10	26 – 7
	46 – 7
6FP–42542–00	9 – 11
67G–42546–00	26 – 5
	46 – 5
67G–42561–00	26 – 14
	46 – 14
67G–42562–00	26 – 15
	46 – 15
6JX–42610–02	2 – 1
6JY–42610–02	2 – 1
6FP–42615–02	2 – 14
6FP–4261A–03	2 – 2
6EK–42646–00	2 – 4
6FP–42647–00	2 – 5
663–42662–01	2 – 13
68F–42663–01	2 – 12
6JX–42675–01	2 – 18
6JX–42676–01	2 – 20
6BC–42677–01	2 – 16
60C–42677–21	2 – 16
6BC–42678–21	2 – 17
60C–42678–31	2 – 17
6S1–4267A–01	2 – 21
60C–42681–11	2 – 19
6DA–42697–00	2 – 15
6FP–42710–01–8D	21 – 1
648–42715–00	27 – 26
6EK–42716–01	21 – 23
67F–42717–00	21 – 21
6X4–42725–01	23 – 53
	43 – 53
6EK–42725–10	21 – 16
6AH–42726–01	22 – 11
6H1–42726–31	22 – 1
6EK–42727–01	32 – 6

PART NO. CODIGO Nº	REF. NO.
6X4–42727–01	24 – 18
	44 – 18
6EK–42728–01	21 – 15
6X4–42728–10	23 – 63
	43 – 63
6FP–42741–00–8D	22 – 18
6H4–42748–01	21 – 20
6CB–42761–00	21 – 18
6EK–42769–01	32 – 17
6EE–42794–41	21 – 26
6EE–42794–51	21 – 27
6FP–42815–00–8D	21 – 5
6FP–42816–00–8D	21 – 6
6CB–42818–00	21 – 10
6X4–42821–00	23 – 29
	43 – 29
6EK–43111–00–8D	28 – 1
6EK–43112–00–8D	28 – 2
6EK–43126–00	28 – 27
64E–43131–30	28 – 9
64E–43139–11	29 – 3
66T–43144–00	21 – 13
	28 – 21
6E5–43145–01	39 – 7
6G5–43148–00	28 – 18
6EK–43181–00	28 – 15
6EK–43185–00	28 – 16
6EK–43311–00–8D	28 – 5
6EK–43311–10–8D	28 – 5
682–43318–01	26 – 8
	46 – 8
6FP–43800–02	30 – 1
6EK–43804–11	31 – 3
6LH–43805–00	31 – 2
6EK–4380F–00	31 – 6
6C5–4380G–00	30 – 33
6FP–4380K–02	30 – 29
6EK–4380P–00	30 – 10
6EK–4380R–00	30 – 7
6EK–43810–00	30 – 2
6EK–43811–00	30 – 9
6H1–43812–00	30 – 3
6C5–43816–00	30 – 32
6C6–43817–00	30 – 30
6EK–43818–00	28 – 31
6EK–4381B–00	30 – 20
6EK–43821–00	30 – 4
6EK–43829–00	30 – 26

PART NO. CODIGO Nº	REF. NO.
6EK–4382E–00	30 – 39
6D8–4382L–00	30 – 62
6FP–43830–00	30 – 35
6EK–43831–00	30 – 63
6H1–43834–10	28 – 32
6D8–43841–00	30 – 55
6D8–43843–00	30 – 50
6D8–43844–00	30 – 48
6H1–43844–10	30 – 59
6EK–43845–00	30 – 66
69A–4384F–00	30 – 56
6H1–4384G–11	30 – 58
62X–4384H–00	30 – 22
	30 – 28
6D8–4384M–00	30 – 37
6D8–43851–00	30 – 45
6C6–43853–00	30 – 41
6C5–43854–00	30 – 52
6C5–43855–10	30 – 46
6EK–43856–00	30 – 49
6D8–43861–00	30 – 6
	30 – 8
6EK–43861–00	30 – 5
6H1–43862–00	30 – 11
	30 – 15
6EK–43862–01	31 – 13
6D8–43863–00	30 – 64
67F–43865–00	30 – 14
62X–4386K–00	31 – 7
6EK–43875–00	30 – 19
6H1–43875–00	30 – 65
63P–43879–10	31 – 8
6C6–4387G–00	30 – 42
6LH–4387G–00	31 – 12
6EK–43880–14	30 – 68
	31 – 1
6EK–43881–14	31 – 10
6LH–43882–00	31 – 11
6H1–43883–00	30 – 38
6EK–43892–00	31 – 4
6C5–43895–00	30 – 51
6EK–43899–00	30 – 21
69J–4389J–00	30 – 31
	30 – 36
6X4–44100–01	23 – 20
	43 – 20
6X4–44102–00	23 – 22
	43 – 22

PART NO. CODIGO Nº	REF. NO.
6X4–44114–00	24 – 16
	44 – 16
6EK–44117–01	27 – 8
6EK–44118–00	27 – 22
6EK–44120–01	27 – 17
6EK–44120–11	27 – 17
6EK–44121–00	27 – 15
63P–44122–00	27 – 12
6X4–44132–00	23 – 24
	43 – 24
6EK–44135–00	27 – 37
6X4–44139–01	23 – 8
	43 – 8
6E5–44150–03	34 – 20
6X4–44159–A0–8D	23 – 46
	43 – 46
6X4–44173–00	23 – 47
	43 – 47
6X4–44177–00	23 – 11
	43 – 11
6X4–44188–00	23 – 14
	43 – 14
703–44189–20	41 – 36
703–44189–30	41 – 43
703–44189–40	41 – 41
6X3–44191–00	23 – 49
	41 – 48
	43 – 49
61A–44311–01	34 – 26
6E5–44312–00	34 – 31
6E5–44315–A0	34 – 35
	49 – 15
	49 – 26
6R3–44322–42	34 – 27
	49 – 21
60C–44323–40	34 – 34
	49 – 25
6E5–44352–01	34 – 32
	49 – 24
6E5–44365–01	34 – 30
6EK–44365–01	35 – 3
6E5–44366–01	35 – 1
6EK–44379–00	35 – 4
6P2–44391–00	22 – 4
	22 – 13
6FP–44514–00	29 – 23
6EK–44526–00	29 – 26
6EK–44536–00	28 – 38

PART NO. CODIGO Nº	REF. NO.
6EK–44551–00–8D	29 – 12
6EK–44553–00–8D	29 – 21
63P–44555–00	29 – 15
61A–44575–01	29 – 14
6EK–45111–00–8D	32 – 11
6EK–45111–10–8D	32 – 11
67F–45127–00	32 – 25
	49 – 8
6EK–45135–00	32 – 26
6C5–45155–02	32 – 18
6EK–45181–01	32 – 10
688–45214–02	35 – 8
688–45215–02	35 – 9
6H1–45251–03	1 – 13
	28 – 36
6JX–45300–01–8D	34 – 1
6JX–45300–11–8D	34 – 1
6E5–45301–07–8D	34 – 2
6EK–45318–00	32 – 27
6E5–45321–00	34 – 16
6E5–45331–00–9S	34 – 38
6E5–45332–00–CA	34 – 60
688–45341–10	34 – 7
6E5–45344–00	34 – 44
6E5–45371–01	1 – 17
	35 – 12
688–45375–00	34 – 11
663–45376–00	34 – 10
6E5–45378–00	34 – 12
688–45383–02	34 – 70
688–45384–02	34 – 71
6EK–45501–00	34 – 46
6EK–45501–10	34 – 46
61A–45527–00	34 – 25
6E5–45536–00	34 – 9
61A–45538–00	34 – 22
68V–45551–00	34 – 47
68V–45560–00	34 – 49
6E5–45567–01	34 – 5
6E5–45567–10	34 – 5
6E5–45567–20	34 – 5
6E5–45567–30	34 – 5
6E5–45567–40	34 – 5
6E5–45567–50	34 – 5
6E5–45567–60	34 – 5
68V–45571–00	34 – 62
6E5–45576–00	34 – 63
6L6–45577–00	34 – 67

PART NO. CODIGO Nº	REF. NO.
6L6–45577–10	34 – 67
6L6–45577–20	34 – 67
6L6–45577–30	34 – 67
6L6–45577–40	34 – 67
6L6–45577–50	34 – 67
6L6–45577–60	34 – 67
6E5–45587–01	34 – 41
6E5–45587–10	34 – 41
6E5–45587–20	34 – 41
6E5–45587–30	34 – 41
6E5–45587–40	34 – 41
6E5–45587–50	34 – 41
6E5–45587–60	34 – 41
6E5–45611–01	34 – 51
68V–45631–02	34 – 58
6E5–45633–01	34 – 59
6E5–45634–02	34 – 52
6N7–45930–00	35 – 20
688–45930–02	35 – 19
6N7–45932–00	35 – 20
688–45932–60	35 – 19
68V–45941–00	35 – 19
6E5–45941–00	35 – 19
6EK–45941–00	35 – 20
6FP–45941–00	35 – 20
68V–45943–00	35 – 19
6E5–45943–00	35 – 19
6EK–45943–00	35 – 20
6FP–45943–00	35 – 20
6EK–45945–00	35 – 20
6FP–45945–00	35 – 20
6E5–45945–01	35 – 19
6E5–45947–00	35 – 19
6EK–45947–00	35 – 20
6FP–45947–00	35 – 20
6E5–45949–00	35 – 19
6EK–45949–00	35 – 20
6FP–45949–00	35 – 20
6E5–45952–00	35 – 19
6E5–45954–00	35 – 19
6E5–45956–00	35 – 19
6E5–45958–00	35 – 19
6H1–45970–00	35 – 20
6N7–45970–00	35 – 20
688–45970–03	35 – 19
62A–45970–10	35 – 19
6H1–45972–00	35 – 20
6N7–45972–00	35 – 20

NUMERICAL INDEX
INDICE NUMERICO

PART NO. CODIGO Nº	REF. NO.
688–45972–02	35 – 19
62A–45972–10	35 – 19
6H1–45974–00	35 – 20
6N7–45974–00	35 – 20
688–45974–02	35 – 19
62A–45974–10	35 – 19
62A–45976–00	35 – 19
6H1–45976–00	35 – 20
6N7–45976–00	35 – 20
688–45976–01	35 – 19
6H1–45978–00	35 – 20
6N7–45978–00	35 – 20
688–45978–60	35 – 19
6EK–45982–00	35 – 21
	35 – 24
6E5–45987–01	35 – 14
688–45997–01	35 – 15
6N6–45B70–00	35 – 23
6N6–45B72–00	35 – 23
6N6–45B74–00	35 – 23
6N6–45B76–00	35 – 23
6N6–45B78–00	35 – 23
6N6–45B80–00	35 – 23
6EK–45C82–09	35 – 22
	35 – 25
6X4–47731–01	23 – 23
	43 – 23
703–48128–10	41 – 39
703–48129–00	23 – 28
	41 – 42
	43 – 28
703–48152–10	41 – 6
703–48153–00	41 – 62
6X4–48154–00	23 – 17
	43 – 17
703–48189–00	41 – 19
703–48198–00	41 – 16
703–48205–25	40 – 1
	41 – 1
703–48205–B5	40 – 1
	41 – 1
703–48211–10	41 – 25
703–48212–10	41 – 26
703–48213–10	41 – 27
6X4–48215–00	23 – 3
	43 – 3
703–48215–11	41 – 47
703–48219–10	41 – 34

PART NO. CODIGO Nº	REF. NO.
703–48221–10	41 – 28
703–48222–20	41 – 31
703–48223–10	41 – 32
703–48225–10	41 – 33
703–48227–00	41 – 30
703–48232–00	41 – 2
703–48234–00	41 – 20
703–48235–00	41 – 5
703–48236–00	41 – 18
703–48238–00	41 – 24
703–48243–00	41 – 17
703–48244–00	41 – 23
703–48245–00	41 – 13
703–48246–00	41 – 29
701–48248–00	41 – 15
703–48252–00	41 – 14
6X4–48261–00	23 – 26
	43 – 26
703–48261–01	41 – 4
703–48264–00	41 – 8
703–48265–10	41 – 11
703–48268–00	41 – 7
703–48271–00	41 – 3
703–48281–00	41 – 35
703–48284–00	41 – 59
701–48287–00	41 – 46
703–48293–11	41 – 45
701–48320–50	40 – 2
701–48320–60	40 – 2
701–48320–80	40 – 2
6EK–48321–00	23 – 32
	43 – 32
6E5–48344–00	27 – 6
	27 – 28
703–48345–01	41 – 21
701–48350–00	40 – 2
701–48350–10	40 – 2
701–48350–20	40 – 2
703–48358–01	41 – 22
6EK–48531–01	27 – 1
6FP–48532–00	27 – 2
63D–48538–00	23 – 37
	23 – 43
	43 – 37
	43 – 43
6EK–48538–00	27 – 4
6X4–48538–00	23 – 33
	43 – 33

PART NO. CODIGO Nº	REF. NO.
6X4–48538–10	23 – 40
	43 – 40
6EK–61350–00	39 – 1
6E5–61355–00	39 – 2
6C5–81146–10	7 – 15
6FP–81337–11	13 – 11
6FP–81410–10	13 – 3
6EM–81800–02	20 – 1
69J–81801–11	20 – 5
6CB–81807–00	20 – 8
6CB–81809–00	20 – 14
67F–81810–00	20 – 3
67F–81813–00	20 – 6
6CB–81820–00	20 – 7
67F–81821–00	20 – 11
6FP–81822–10	16 – 4
6CB–81826–00	20 – 22
69J–81828–00	20 – 23
67F–81830–00	20 – 16
6CB–81832–00	20 – 9
6CB–81836–00	20 – 10
6C5–81839–00	20 – 19
67F–8183R–00	20 – 13
60V–8183T–00	20 – 17
69J–81840–11	20 – 4
67F–81841–00	20 – 12
6CB–81842–00	20 – 18
67F–81846–00	20 – 24
67F–81850–00	20 – 2
6X4–81860–00	44 – 21
6C5–81869–00	20 – 21
67F–81891–00	20 – 15
6FP–81919–01	14 – 20
60V–81925–00	16 – 2
6EM–81941–01	20 – 20
6X4–81942–01	24 – 21
6FP–81948–10	14 – 3
6FP–81952–00	17 – 5
6EK–81960–10	15 – 15
6FP–81975–00	15 – 16
6FM–81980–01	18 – 6
6EE–81994–41	13 – 17
6EE–81994–51	13 – 18
6AH–81996–01	21 – 28
68V–82105–02	16 – 9
6P2–82113–00	14 – 16
682–82119–01	17 – 2
6D8–82148–00	28 – 24

PART NO. CODIGO Nº	REF. NO.
6E5–82148–00	28 – 3
66K–82149–00	28 – 8
68V–82149–30	28 – 8
6FP–82151–01	14 – 11
6G1–82151–01	42 – 5
6CB–82151–20	14 – 12
6CB–82151–30	14 – 13
6FP–82170–02	14 – 10
6EK–82181–00	31 – 5
6FP–82310–00	15 – 1
6FP–82310–10	15 – 2
6FP–82316–00	15 – 11
6A0–82317–01	13 – 13
	15 – 13
67F–82361–00	15 – 6
	15 – 7
6EK–82370–00	15 – 4
68V–82504–00	18 – 11
6X4–82510–11	24 – 1
703–82510–14	41 – 49
6X4–82510–42	44 – 1
703–82510–45	41 – 49
703–82531–00	41 – 52
6K1–82532–00	41 – 51
703–82532–00	24 – 3
	41 – 51
	44 – 3
6FP–8253C–00	14 – 2
6X4–82540–00	23 – 27
	43 – 27
703–82540–00	41 – 56
682–82556–00	24 – 6
	41 – 54
	44 – 6
6FM–82563–01	18 – 15
6X4–82563–01	24 – 8
	44 – 8
703–82563–31	41 – 58
69W–82575–00	24 – 5
	44 – 5
688–82575–02	41 – 53
703–82577–00	41 – 50
676–82577–01	24 – 2
	41 – 50
	44 – 2
6C5–8257V–00	14 – 8
689–8257Y–00	24 – 7
	44 – 7

PART NO. CODIGO Nº	REF. NO.
68F–82582–00	16 – 3
6DA–82582–00	18 – 3
6DA–82582–10	18 – 4
6Y8–82582–11	18 – 2
6X4–82586–11	24 – 10
	44 – 10
61A–82588–01	27 – 9
688–8258A–10	18 – 24
688–8258A–20	41 – 55
6JX–82590–02	18 – 1
6FP–82590–12	18 – 1
703–82591–00	41 – 60
703–82592–00	41 – 61
68V–82594–00	21 – 22
60V–8259F–01	27 – 27
63P–825E0–02	47 – 1
6X4–83383–00	24 – 11
	44 – 11
703–83383–11	41 – 57
6X4–83386–00	24 – 12
	44 – 12
6Y5–83504–24	19 – 1
6Y5–8350T–E3	42 – 1
6JX–83519–00	19 – 3
6Y5–83553–01	42 – 4
6E5–83558–00	22 – 16
6E5–83558–10	34 – 14
6FM–83589–00	24 – 19
	44 – 19
6FP–83626–01	13 – 15
6X4–83653–20	24 – 14
	44 – 14
6Y5–83653–20	42 – 6
6Y5–83653–30	42 – 6
67H–83672–02	29 – 1
68F–83688–10	7 – 11
6C5–84301–10	24 – 15
	44 – 15
6Y8–84383–00	42 – 3
68F–85119–00	14 – 6
	17 – 8
6X4–85415–00	24 – 20
	44 – 20
68F–85516–01	17 – 6
69L–85516–01	10 – 27
6FP–85544–00	14 – 14
689–85547–01	12 – 1
6JX–85548–00	18 – 12

PART NO. CODIGO Nº	REF. NO.
68V–85548–01	14 – 18
6FP–85561–00	13 – 5
60V–85564–00	14 – 4
6CB–85580–01	13 – 4
6CJ–85780–02	18 – 17
6CJ–85790–00	18 – 9
8GL–85885–01	7 – 6
6JX–8591A–02	14 – 1
6JY–8591A–02	14 – 1
6FP–86112–00	8 – 3
6C5–86120–00	8 – 1
6FP–87226–00	10 – 19
K1C–A3275–00	4 – 10
7BB–G3861–00	30 – 17
6FP–W0001–01	48 – 1
6EK–W0001–21	49 – 1
60C–W0078–01	1 – 18
	49 – 20
6JX–W009A–10–9S	5 – 1
6FP–W009B–12–9S	3 – 1
6FP–W1111–00–9S	5 – 2
6EK–W1165–00	4 – 9
6FP–W4624–00	6 – 27
6FP–W8145–02	13 – 1
63P–W8195–00	17 – 1
6FP–W9010–00	13 – 2
90101–12014	23 – 55
	43 – 55
90101–12064	28 – 41
90101–12065	28 – 41
90105–06037	3 – 29
90105–06039	2 – 6
90105–06151	3 – 42
	33 – 15
90105–06208	12 – 28
90105–06M14	16 – 10
90105–08170	3 – 7
90105–08175	5 – 21
90105–08220	5 – 20
90105–08248	16 – 7
90105–10M00	35 – 13
90105–14007	29 – 25
90105–14013	29 – 18
90109–05M89	13 – 6
90109–06286	3 – 12
90109–06288	27 – 35
	27 – 38
90109–06292	33 – 8

NUMERICAL INDEX
INDICE NUMERICO

PART NO. CODIGO Nº	REF. NO.
90109–06316	21 – 19
90109–06M65	5 – 15
90109–06M81	27 – 3
90109–06M86	21 – 14
90111–08078	2 – 7
90116–10063	25 – 2
	45 – 1
90119–06276	28 – 37
90119–06286	34 – 19
90119–06291	9 – 9
90119–06294	15 – 12
90119–06296	9 – 5
90119–06307	7 – 27
90119–06309	7 – 12
	8 – 12
90119–06MA4	15 – 17
90119–08020	7 – 18
90119–08187	21 – 2
90119–08191	34 – 37
	49 – 28
90119–08193	26 – 2
	46 – 2
90119–10007	32 – 13
90119–10054	28 – 35
90119–10057	3 – 6
90119–10058	29 – 22
90119–10071	35 – 7
90149–05041	7 – 7
90149–10072	5 – 19
90151–06M02	3 – 27
90152–05007	23 – 9
	43 – 9
90152–05M07	35 – 10
90157–05M19	36 – 4
	38 – 4
90159–05059	29 – 4
	47 – 3
90159–05M26	19 – 2
90159–06053	22 – 23
90159–06M28	22 – 20
90170–09M03	39 – 3
90170–16M01	34 – 48
90171–18M04	35 – 17
90176–14002	29 – 19
	29 – 28
90179–06M28	9 – 10
90179–08003	16 – 1
90183–061A8	22 – 22

PART NO. CODIGO Nº	REF. NO.
90185–05002	35 – 11
90185–08057	26 – 13
	46 – 13
90185–09M01	39 – 5
90185–10027	25 – 3
	45 – 2
90185–10M14	26 – 9
	46 – 9
90185–12M12	23 – 62
	43 – 62
90185–22M11	28 – 12
90201–06M05	27 – 34
	27 – 39
90201–08M01	26 – 3
	46 – 3
90201–10060	28 – 34
90201–10081	39 – 9
90201–10144	6 – 26
90201–10M20	39 – 6
90201–10M76	26 – 10
	46 – 10
90201–11008	27 – 20
90201–12035	23 – 59
	43 – 59
90201–12426	28 – 43
90201–13M01	28 – 42
90201–156J2	21 – 8
90201–16M55	29 – 17
90201–186F1	3 – 24
	48 – 11
90201–21016	6 – 17
90201–22M01	34 – 23
90201–26M59	28 – 11
90201–30M92	34 – 68
90201–38M60	29 – 8
90202–08M20	27 – 13
90202–32M19	29 – 16
90202–40M47	29 – 11
90206–12M22	23 – 57
	43 – 57
90206–15M18	21 – 9
90206–22M19	34 – 24
90249–06M19	28 – 20
90250–08M07	34 – 57
90280–04M05	34 – 33
	49 – 29
90282–04010	34 – 69
90338–08174	29 – 7

PART NO. CODIGO Nº	REF. NO.
90340–08002	34 – 6
90340–14M06	5 – 9
	33 – 3
90340–18M09	3 – 23
90340–27001	5 – 8
90340–97002	5 – 6
90340–99001	5 – 4
90383–20001	28 – 33
90386–06M12	27 – 16
90386–08001	7 – 25
90386–08032	23 – 15
	43 – 15
90386–10001	27 – 19
90386–10M16	28 – 17
90386–12003	23 – 60
	43 – 60
90386–15M73	21 – 7
90386–18001	28 – 29
90386–18M35	28 – 28
90386–25M31	28 – 10
90386–26MA3	23 – 50
	43 – 50
90386–38M32	29 – 10
90387–05004	47 – 4
90387–06119	13 – 12
	15 – 14
90387–06176	14 – 5
	17 – 7
90387–06289	7 – 13
	8 – 11
90387–06M03	10 – 26
90387–06M43	22 – 24
90387–07013	7 – 26
90387–07046	2 – 3
90387–08M37	21 – 4
90387–08M45	2 – 10
90387–10094	2 – 8
90387–10M42	39 – 4
90387–12M02	23 – 58
	43 – 58
90401–10050	6 – 18
90401–20007	3 – 39
90430–06014	5 – 16
	48 – 5
90430–08003	1 – 16
	34 – 8
	49 – 10
90430–08143	32 – 3

PART NO. CODIGO Nº	REF. NO.
90430–08143	49 – 5
90430–14115	5 – 10
	18 – 10
	48 – 2
	48 – 21
90430–14M09	1 – 15
	33 – 4
	49 – 2
90440–16001	35 – 2
90440–16002	35 – 2
90445–073F9	22 – 14
90445–07ME8	34 – 13
90445–07ME9	34 – 13
90445–13M25	36 – 9
	38 – 9
90445–13M26	36 – 11
	38 – 11
90464–05141	17 – 14
90464–07259	22 – 15
90464–07M05	15 – 8
90464–08M07	24 – 4
	44 – 4
90464–09013	9 – 15
	15 – 10
90464–09021	9 – 14
90464–09M42	23 – 35
	43 – 35
90464–09M47	7 – 29
	18 – 5
90464–10011	9 – 13
90464–11121	17 – 13
90464–12002	15 – 9
90464–12010	11 – 16
90464–12183	7 – 16
	14 – 7
	17 – 10
	17 – 11
90464–13227	3 – 43
	18 – 7
	18 – 22
90464–13249	13 – 10
	18 – 14
	18 – 19
	19 – 5
	21 – 25
90464–15007	11 – 15
90464–16001	18 – 16
	18 – 20

PART NO. CODIGO Nº	REF. NO.
90464–16001	18 – 21
90464–17006	7 – 17
90464–20181	18 – 18
90464–26001	7 – 28
	7 – 30
90464–65001	7 – 24
90465–08M63	28 – 7
90465–08M83	3 – 32
90465–11M10	3 – 22
	3 – 34
	8 – 23
	9 – 12
	11 – 9
	12 – 11
	12 – 27
	13 – 7
	22 – 3
	22 – 12
	22 – 17
	28 – 14
	29 – 5
	34 – 15
	47 – 5
90465–11M59	3 – 14
	33 – 19
90465–13M11	17 – 12
90465–13M18	28 – 26
90465–13M24	25 – 4
	45 – 4
90465–13M30	21 – 17
90465–13M97	18 – 23
90467–08M18	9 – 16
	11 – 14
90467–09M17	8 – 24
90468–10005	23 – 38
	23 – 44
	43 – 38
	43 – 44
90468–18008	27 – 7
	27 – 14
	27 – 29
90468–180A0	27 – 21
90480–10M23	8 – 10
90480–11006	9 – 8
90480–12314	5 – 28
90480–13M24	22 – 21
90480–20M05	32 – 21
90480–22M15	21 – 3

PART NO. CODIGO Nº	REF. NO.
90480–25161	15 – 3
90501–12082	27 – 25
90501–16M37	34 – 53
90501–200A2	32 – 20
90501–23215	23 – 13
	43 – 13
90506–14M24	28 – 23
90506–22001	21 – 12
91312–06035	13 – 9
91318–03005	30 – 61
91318–03025	30 – 60
91318–05030	30 – 53
91318–05045	30 – 34
91380–06025	30 – 67
91490–20010	23 – 10
	23 – 19
	43 – 10
	43 – 19
91490–40030	35 – 18
91609–16012	30 – 12
91690–30010	27 – 5
91690–30020	28 – 19
91690–50014	7 – 21
92903–08100	16 – 12
92990–08600	2 – 9
	41 – 38
92990–10200	6 – 19
92990–12200	23 – 56
	43 – 56
92990–12600	23 – 61
	43 – 61
92990–18200	35 – 16
92995–14600	29 – 20
	29 – 27
93101–28M16	34 – 39
	49 – 16
93101–30M17	34 – 65
	49 – 18
93102–48017	6 – 31
	48 – 3
93102–85008	4 – 4
	48 – 13
93106–09014	34 – 18
	49 – 12
93210–04N51	30 – 43
93210–064A5	30 – 44
93210–08287	36 – 14
	37 – 5

NUMERICAL INDEX
INDICE NUMERICO

PART NO. CODIGO Nº	REF. NO.
93210–08287	38 – 14
93210–09165	27 – 18
	30 – 25
93210–13M63	3 – 19
	5 – 14
	21 – 24
	32 – 31
	48 – 4
	48 – 10
	49 – 9
93210–14579	5 – 5
93210–16275	39 – 8
93210–17014	7 – 5
93210–18322	5 – 7
93210–19MJ1	3 – 8
	33 – 16
	48 – 8
	48 – 17
93210–207A0	3 – 4
93210–24M79	5 – 32
	48 – 19
93210–30682	12 – 26
	48 – 20
93210–37160	34 – 29
	49 – 14
	49 – 23
93210–37MH7	29 – 9
93210–55M14	34 – 43
	49 – 17
93210–58144	34 – 17
	49 – 11
93210–68N50	30 – 27
93210–86M38	34 – 28
	49 – 13
	49 – 22
93210–86M39	34 – 66
	49 – 19
93306–208U0	34 – 61
93315–425U7	34 – 50
93315–430U8	34 – 64
93315–628U9	34 – 3
93317–330U2	34 – 40
93332–000U7	34 – 4
93341–930V2	34 – 42
93410–18M05	28 – 30
93410–36102	29 – 13
93430–06024	41 – 12
93450–19052	4 – 14

PART NO. CODIGO Nº	REF. NO.
93501–04M02	27 – 24
93501–08001	30 – 47
93503–16003	30 – 16
	34 – 56
93505–32038	30 – 13
	30 – 40
93507–32009	34 – 54
93511–32017	34 – 55
93604–26256	30 – 54
93605–17002	6 – 21
93606–12019	3 – 5
	4 – 3
	32 – 8
	32 – 16
	33 – 5
	34 – 36
	49 – 27
93608–12M05	32 – 5
	35 – 5
93700–06002	23 – 2
	28 – 6
	43 – 2
94702–00440	1 – 6
	5 – 33
95333–08600	16 – 11
95380–05600	27 – 41
	41 – 9
95380–06600	8 – 2
	22 – 19
	23 – 18
	41 – 44
	43 – 18
95380–12600	28 – 44
95780–08300	2 – 11
95812–08050	16 – 5
95817–08040	16 – 6
95817–10035	6 – 25
95D75–06040	27 – 11
95D75–10060	29 – 24
95D95–06010	28 – 40
95D95–06012	6 – 24
95D95–06014	9 – 7
95D95–06016	17 – 9
	18 – 13
95D95–06025	27 – 33
	32 – 24
95D95–06030	5 – 26
	13 – 8

PART NO. CODIGO Nº	REF. NO.
95D95–06030	13 – 14
	27 – 23
	32 – 7
95D95–08012	21 – 11
95D95–08020	3 – 21
97380–05025	41 – 10
97380–08030	41 – 37
97602–04316	31 – 9
97607–04208	5 – 24
97780–50620	14 – 17
97780–60520	22 – 6
97780–60620	14 – 9
	14 – 19
	19 – 4
	24 – 17
	44 – 17
97780–60920	23 – 48
	43 – 48
97885–06008	28 – 4
97980–06216	24 – 9
	44 – 9
97985–04116	27 – 10
97985–04308	16 – 8
97985–06216	23 – 52
	29 – 2
	43 – 52
97D95–06014	23 – 36
	23 – 42
	24 – 13
	43 – 36
	43 – 42
	44 – 13
97D95–08014	32 – 2
97E75–08535	32 – 12
97E75–10545	32 – 4
	32 – 14
	32 – 15
	33 – 2
97E95–06510	28 – 25
97E95–06512	28 – 22
97E95–06516	5 – 30
	8 – 6
	18 – 8
	47 – 2
97E95–06520	17 – 4
97E95–06525	15 – 5
97E95–06530	23 – 31
	43 – 31

PART NO. CODIGO Nº	REF. NO.
97E95–06610	17 – 3
97E95–06616	28 – 39
97E95–08520	28 – 13
97E95–08525	26 – 12
	34 – 45
	46 – 12
97E95–08540	23 – 30
	43 – 30
97E95–10545	35 – 6
98580–04006	41 – 40
98980–05025	3 – 17
	5 – 12
	32 – 29
99001–08600	34 – 21
99002–03600	30 – 57
99009–47500	30 – 24
99530–14016	5 – 18
9E450–04533	42 – 2